SolarEdge

StorEdge Solution with Backup Installation Guide

For Europe, APAC & South Africa

Version 1.0

Disclaimers

Important Notice

Copyright © SolarEdge Inc. All rights reserved.

No part of this document may be reproduced, stored in a retrieval system or transmitted, in any form or by any means, electronic, mechanical, photographic, magnetic or otherwise, without the prior written permission of SolarEdge Inc.

The material furnished in this document is believed to be accurate and reliable. However, SolarEdge assumes no responsibility for the use of this material. SolarEdge reserves the right to make changes to the material at any time and without notice. You may refer to the SolarEdge web site (www.solaredge.com) for the most updated version.

All company and brand products and service names are trademarks or registered trademarks of their respective holders.

Patent marking notice: see http://www.solaredge.com/groups/patent

The general terms and conditions of delivery of SolarEdge shall apply.

The content of these documents is continually reviewed and amended, where necessary. However, discrepancies cannot be excluded. No guarantee is made for the completeness of these documents.

The images contained in this document are for illustrative purposes only and may vary depending on product models.

Emission Compliance

This equipment has been tested and found to comply with the limits applied by the local regulations. These limits are designed to provide reasonable protection against harmful interference in a residential installation. This equipment generates, uses and can radiate radio frequency energy and, if not installed and used in accordance with the instructions, may cause harmful interference to radio communications. However, there is no guarantee that interference will not occur in a particular installation. If this equipment does cause harmful interference to radio or television reception, which can be determined by turning the equipment off and on, you are encouraged to try to correct the interference by one or more of the following measures:

- Reorient or relocate the receiving antenna.
- Increase the separation between the equipment and the receiver.
- Connect the equipment into an outlet on a circuit different from that to which the receiver is connected.
- Consult the dealer or an experienced radio/TV technician for help.

Changes or modifications not expressly approved by the party responsible for compliance may void the user's authority to operate the equipment.

Contents

Disclaimers **1**
Important Notice 1
Emission Compliance 1
Contents **2**
HANDLING AND SAFETY INSTRUCTIONS **5**
Safety Information 5
IMPORTANT INVERTER SAFETY INSTRUCTIONS **6**
Chapter 1: Overview **8**
The StorEdge Solution Components 8
Installation Workflow 9
Chapter 2: Installing the Power Optimizers **10**
Safety 10
Installation Guidelines 11
Step 1: Mounting the Power Optimizers 11
Step 2: Connecting a PV Module to a Power Optimizer 12
Step 3: Connecting Power Optimizers in Strings 12
Step 4: Verifying Proper Power Optimizer Connection 14
Chapter 3: Installing the Inverter **15**
Inverter Package Contents 15
Identifying the Inverter 15
Inverter Interfaces 16
Internal AC Breaker and Bypass Switch 18
Mounting the Inverter 19
Chapter 4: Installing the Backed-up Loads Panel and Meter **21**
Installing the Backed-up Loads Panel 21
Electricity Meter Installation 22
Chapter 5: StorEdge Inverter Connections **23**
Opening the StorEdge Connection Unit Covers 24
Installing the 9V Battery 25
Connecting the Strings to the Inverter 25
Connecting to the Battery 25
Battery Grounding 29
Connecting to the AC Grid and to Backed-up Loads 30
Connecting Communication to the Meter 31
Chapter 6: Commissioning the Installation **32**
Removing the Inverter Cover 32
Step 1: Activating the System 33
Step 2: Pairing Power Optimizers to the Inverter 35
Step 3: Verifying Proper Operation 37
Step 4: Reporting and Monitoring Installation Data 37
The SolarEdge Monitoring System 37
Providing Installation Information 38
Paper Template 38

Site Mapper 38
Creating a Site in the SolarEdge Monitoring Portal 38
Chapter 7: User Interface 39
LCD User Buttons 39
Inverter Configuration – Setup Mode 40
Configuring the Inverter Using the LCD User Buttons 40
Configuring the Inverter Using the LCD Light Button 43
Configuration Menu Options 45
Country and Grid 45
Language 45
Communication 45
Power Control 47
Display 47
Maintenance 48
Information 48
Status Screens - Operational Mode 49
Initial Status 49
Main Inverter Status 49
Energy Meter Status 50
Telemetry Status 50
ID Status 51
Server Communication Status 51
IP Status 51
ZigBee Status 52
Wi-Fi Status 52
GSM Status 52
Communication Ports Status 53
Smart Energy Management Status 53
Power Control Status 54
Battery Status 54
Time Of Use Status 55
Chapter 8: Setting Up Communication to the Monitoring Portal 56
Communication Types 57
Communication Connectors 57
Creating an Ethernet (LAN) Connection 58
Creating an RS485 Bus Connection 60
Verifying the Connection 63
Chapter 9: System Configuration 64
Configuring the RS485 Bus for Battery and Meter Connection 64
Configuring StorEdge Application 67
Backup Power Applications 67
System Configuration 67
Verifying StorEdge Components Functionality 69
Appendix A: Troubleshooting 72
Communication Troubleshooting 72

Device type, number and protocol are displayed incorrectly ... 72
Troubleshooting Ethernet Communication ... 72
Meter Troubleshooting ... 73
<OK> is not displayed ... 73
An error message is displayed ... 73
Power [Wh] Import value is not advancing ... 73
Battery Troubleshooting ... 75
Additional StorEdge Troubleshooting ... 75
Error Codes ... 76
General Inverter Error Codes ... 77
StorEdge-related Errors Codes ... 79
System Warnings ... 79
StorEdge Connection Unit LEDs ... 80
Power Optimizer Troubleshooting ... 81
Appendix B: Replacing and Adding System Components ... 82
Replacing an Inverter ... 82
9V Battery Replacement ... 82
Fuse Replacement ... 84
StorEdge Connection Unit Replacement ... 84
Removing the Existing StorEdge Connection Unit ... 84
Installing a New StorEdge Connection Unit ... 85
Appendix C: StorEdge Technical Specifications ... 86
Appendix D: Inverter Dimensions ... 89

HANDLING AND SAFETY INSTRUCTIONS

During installation, testing and inspection, adherence to all the handling and safety instructions is mandatory. **Failure to do so may result in injury or loss of life and damage to the equipment.**

Safety Information

The following safety symbols are used in this document. Familiarize yourself with the symbols and their meaning before installing or operating the system.

WARNING!

Denotes a hazard. It calls attention to a procedure that, if not correctly performed or adhered to, could result in **injury or loss of life**. Do not proceed beyond a warning note until the indicated conditions are fully understood and met.

CAUTION!

Denotes a hazard. It calls attention to a procedure that, if not correctly performed or adhered to, could result in **damage or destruction of the product**. Do not proceed beyond a caution sign until the indicated conditions are fully understood and met.

NOTE

Denotes additional information about the current subject.

IMPORTANT SAFETY FEATURE

Denotes information about safety issues.

Disposal requirements under the Waste Electrical and Electronic Equipment (WEEE) regulations:

NOTE

Discard this product according to local regulations or send it back to SolarEdge.

IMPORTANT INVERTER SAFETY INSTRUCTIONS

SAVE THESE INSTRUCTIONS

WARNING!

The inverter cover must be opened only after shutting off the inverter ON/OFF switch located at the bottom of the inverter. This disables the DC voltage inside the inverter. Wait five minutes before opening the cover. Otherwise, there is a risk of electric shock from energy stored in the capacitors.

WARNING

Before operating the inverter, ensure that the inverter AC power cable and wall outlet are grounded properly.

WARNING

Opening the inverter and repairing or testing under power must be performed only by qualified service personnel familiar with this inverter.

WARNING!

Do not touch the PV panels or any rail system connected when the inverter switch is ON, unless grounded.

WARNING!

Under single fault conditions, the Safe DC voltage is only guaranteed when using modules of up to 95Voc.

CAUTION!

This unit must be operated under the specified operating specifications, as described in the latest technical specification datasheet provided with the unit .

NOTE

The StorEdge Connection Unit is NEMA type 3R rated . Unused glands should be sealed with appropriate seals.

CAUTION!

HEAVY OBJECT. To avoid muscle strain or back injury, use proper lifting techniques, and if required - a lifting aid when removing or replacing.

NOTE

Use PV modules rated according to IEC 61730 class A..

NOTE

The symbol ⏚ appears at grounding points on the SolarEdge equipment. This symbol is also used in this manual.

NOTE

The following warning symbols appear on the inverter warning label:

Risk of electric shock

Risk of electric shock from energy stored in the capacitor. Do not remove cover until 5 minutes after disconnecting all sources of supply.

Hot surface – To reduce the risk of burns, do not touch.

WARNING!

Shutting off the AC breaker does not disable the DC voltage inside the inverter. To obtain safe DC voltage, turn off the inverter ON/OFF switch and the StorEdge Connection Unit ON/OFF switch.

WARNING!

Before operating the system, ensure that the inverter has been grounded properly.

WARNING!

When handling the battery, adhere to all manufacturer safety instructions.

CAUTION!

This unit must be operated under the specified operating conditions as described in the technical specifications supplied with the unit.

NOTE

The battery used must be NRTL certified.

NOTE

For battery decommissioning and disposal, follow the manufacturer requirements and instructions.

Chapter 1: Overview

StorEdge™ is SolarEdge's all-in-one solution that uses a single on-grid DC optimized inverter to manage and monitor both solar power generation and energy storage. Homeowners are automatically provided with backup power in the event of grid interruption to power pre-selected loads. Solar energy can be stored in a battery for Smart Energy Management applications such as export control, offering demand response and peak shaving, and performing time of use shifting for reduced electric bills.

The StorEdge Solution Components

- **The StorEdge Inverter with StorEdge Connection Unit** - The inverter manages battery and system energy, in addition to its traditional functionality as a DC-optimized PV inverter.

  The StorEdge Connection Unit, located at the bottom of the inverter, allows simple installation and connectivity to other system components and includes a DC Safety Switch.
- **The SolarEdge Electricity Meter** - The meter is used by the inverter for export/ consumption readings, and for Smart Energy Management applications, such as: export limitation, time-of-use profile programming and maximizing self-consumption.

  The meter is required only in systems using Smart Energy Management applications (it is not required for StorEdge systems used only for backup power).
- **The Battery** - A DC coupled battery designed to work with the SolarEdge system.

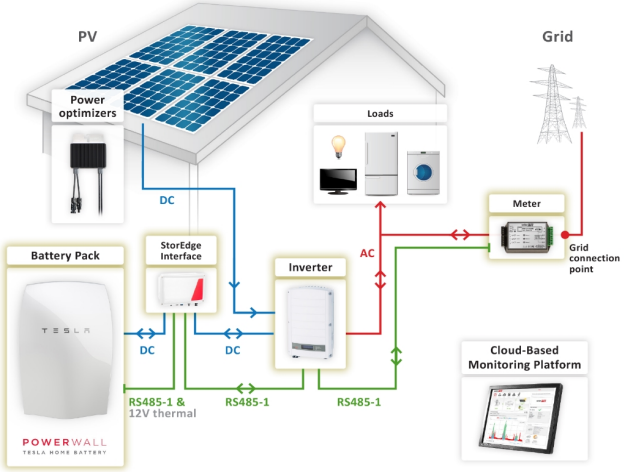

Figure 1: StorEdge system components

NOTE

- Additional SolarEdge inverters (without batteries) can be connected with RS485. The inverters will participate in export limitation and maximizing self-consumption.
  Connecting multiple inverters with RS485 master-slave connection requires an *RS485 Expansion Kit* (available from SolarEdge).
- PV modules connected to power optimizers are not mandatory for charge/discharge profile programming and for backup power.

This document describes basic system connection and configuration - PV system (power optimizer strings), one inverter, one battery, backed-up loads panel and one meter. For additional configuration options refer to the StorEdge Solution Applications - Connection and Configuration Guide.

Installation Workflow

When installing the StorEdge system, follow this workflow to ensure all the components are connected and functioning correctly.

Step 1 - **PV system installation** - modules, power optimizers and inverter:

- Power optimizers - as described in *Installing the Power Optimizers* on page 10.
- Inverter - as described in *Installing the Inverter* on page 15.

Step 2 - **Backed-up loads panel installation (required for Backup Power only)**: Refer to *Connecting to the AC Grid and to Backed-up Loads* on page 30.

Step 3 - **Electricity Meter installation (required for Smart Energy Management only)**. Refer to *Electricity Meter Installation* on page 22.

Step 4 - Connecting PV strings (DC) to the inverter - Refer to *Connecting the Strings to the Inverter* on page 25.

Step 5 - **Connecting the battery to the inverter and mounting the battery**. Refer to the installation information in the manufacturer documentation, and to *StorEdge Inverter Connections* on page 23.

Step 6 - Connecting AC and backed-up loads to the inverter - connect the loads (AC), and meter. Refer to *StorEdge Inverter Connections* on page 23.

Step 7 - Commissioning the inverter - Activate the system and pair the power optimizers. Refer to *Commissioning the Installation* on page 32.

Step 8 - **Connecting to the monitoring portal**. Refer to *Setting Up Communication to the Monitoring Portal* on page 56.

Step 9 - **System Configuration** - Configuring the RS485 bus and StorEdge applications. Refer to *System Configuration* on page 64.

The following flowchart appears throughout this Installation Guide to assist with the installation steps:

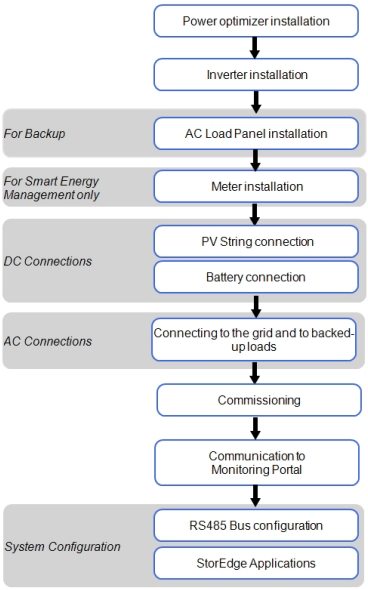

Chapter 2: Installing the Power Optimizers

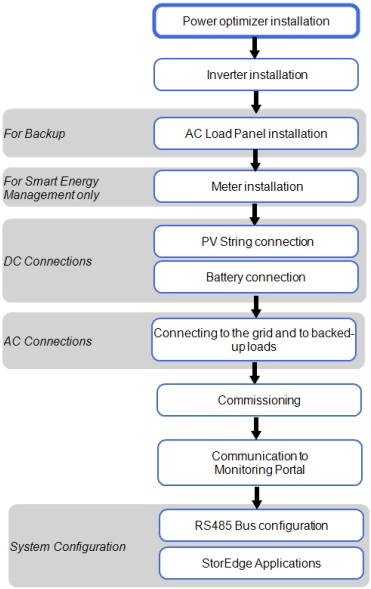

Safety

The following notes and warnings apply when installing the SolarEdge power optimizers. Some of the following may not be applicable to smart modules:

WARNING!

When modifying an existing installation, turn OFF the inverter ON/OFF switch and the AC circuit breaker on the main AC distribution panel.

WARNING!

Input and output connectors are not watertight until mated. Open connectors should be mated to each other or plugged with appropriate watertight caps.

CAUTION!

Power optimizers are IP65/NEMA4 rated. Choose a mounting location where optimizers will not be submerged in water.

CAUTION!

This unit must be operated according to the operating specifications provided with the unit.

CAUTION!

Cutting the power optimizer input or output cable connector is prohibited and will void the warranty.

CAUTION!

All PV modules must be connected to a power optimizer.

CAUTION!

If you intend to mount the optimizers directly to the module or module frame, first consult the module manufacturer for guidance regarding the mounting location and the impact, if any, on module warranty. Drilling holes in the module frame should be done according to the module manufacturer instructions.

CAUTION!

Installing a SolarEdge system without ensuring compatibility of the module connectors with the optimizer connectors may be unsafe and could cause functionality problems such as ground faults, resulting in inverter shut down. In order to ensure mechanical compatibility of the SolarEdge optimizers and the modules to which they are connected, use identical connectors from the same manufacturer and of the same type on both the power optimizers and on the modules.

IMPORTANT SAFETY FEATURE

Modules with SolarEdge power optimizers are safe. They carry only a low safety voltage before the inverter is turned ON. As long as the power optimizers are not connected to the inverter or the inverter is turned OFF, each power optimizer will output a safe voltage of 1V.

Installation Guidelines

- The steps in this chapter refer to module add-on power optimizers. For smart modules, start from *Step 3: Connecting Power Optimizers in Strings* on the next page. Also refer to the documentation supplied with the smart modules.
- The power optimizer can be placed in any orientation.
- Position the power optimizer close enough to its module so that their cables can be connected.
- To allow for heat dissipation, maintain a 2.5 cm/ 1" clearance distance between the power optimizer and other surfaces.
- The minimum and maximum string length guidelines are stated in the power optimizer datasheets.
- Refer to the SolarEdge Site Designer for string length verification. The SolarEdge Site Designer is available on the SolarEdge website at http://www.solaredge.com/groups/support/downloads, under Software Tools.
- Completely shaded modules may cause their power optimizers to temporarily shut down. This will not affect the performance of the other power optimizers in the string, as long as the minimum number of unshaded power optimizers connected in a string of modules is met. If under typical conditions fewer than the minimum optimizers are connected to unshaded modules, add more optimizers to the string.
- Do not leave the power optimizers connectors disconnected. Open connectors should be mated to each other.

NOTE

The images contained in the following sections are for illustrative purposes only and may vary depending on product models.

Step 1: Mounting the Power Optimizers

For each of the power optimizers[1]:

1. Determine the power optimizer mounting location and use the power optimizer mounting brackets to attach the power optimizer to the support structure . For frame-mounted power optimizers follow the instructions supplied with the optimizers.

[1] Not applicable to smart modules.

2. If required, mark the mounting hole locations and drill the hole.

CAUTION!

Do not drill through the power optimizer or through the mounting holes. The drilling vibrations can damage the power optimizer and will void the warranty.

3. Attach each power optimizer to the rack using the M6 (1/4") stainless steel bolts, nuts and washers. Apply torque of 9.5 N*m / 7 lb*ft.
4. Verify that each power optimizer is securely attached to the supporting structure or the module.

NOTE

Record power optimizer serial numbers and locations, as described in *Providing Installation Information* on page 38.

Step 2: Connecting a PV Module to a Power Optimizer

For each of the power optimizers[1]:

- Connect the Plus (+) output connector of the module to the Plus (+) input connector of the power optimizer.
- Connect the Minus (-) output connector of the module to the Minus (-) input connector of the power optimizer.

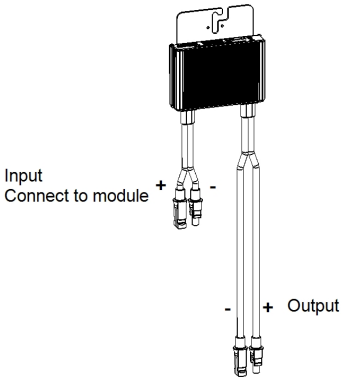

Figure 2: Power optimizer connectors

NOTE

Images are for illustration purposes only. Refer to the label on the product to identify the plus and minus input and output connectors.

Step 3: Connecting Power Optimizers in Strings

You can construct parallel strings of unequal length, that is, the number of power optimizers in each string does not have to be the same. The minimum and maximum string lengths are specified in the power optimizer datasheets. Refer to the SolarEdge Site Designer for string length verification.

[1]Not applicable to smart modules.

NOTE

The total cable length of the string (including power optimizers' cables) should not exceed 1000ft./300m from DC+ to DC- of the inverter. Use at least 11 AWG/ 4 mm² DC cables.

1. Connect the Minus (-) output connector of the string's first power optimizer to the Plus (+) output connector of the string's second power optimizer.
2. Connect the rest of the power optimizers in the string in the same manner.

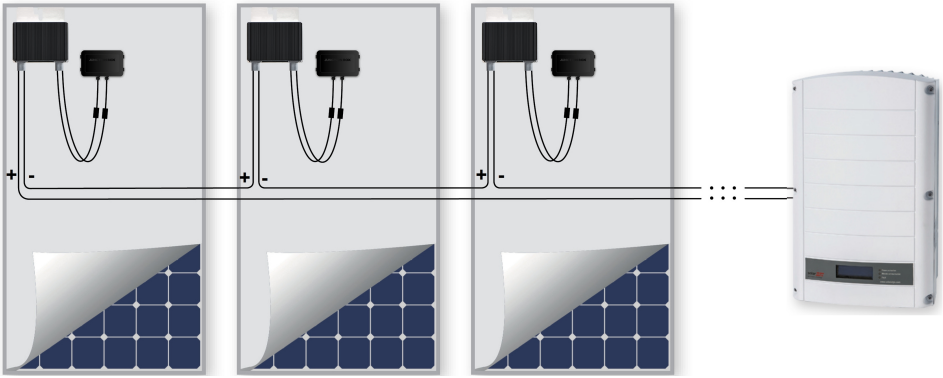

Figure 3: Power optimizers connected in series

3. If you intend to monitor the installation, using the SolarEdge monitoring portal, record the physical location of each power optimizer, as described in *Providing Installation Information* on page 38.

WARNING!

Input and output connectors are not watertight until mated. Open connectors should be mated to each other or plugged with appropriate watertight caps.

Step 4: Verifying Proper Power Optimizer Connection

After a module is connected to a power optimizer, the power optimizer outputs a safe voltage of 1V. Therefore, the total string voltage should be equal to 1V times the number of power optimizers connected in series in the string. For example, if 10 power optimizers are connected in a string, then 10V should be produced.

Make sure the modules are exposed to sunlight during this process; otherwise, the power optimizers may not be powered. If you use a tracker, the power optimizer will turn ON only if the tracker is tracking the sun and the module provides at least 2W.

In SolarEdge systems, due to the introduction of power optimizers between the PV modules and the inverter, the short circuit current I_{SC} and the open circuit voltage V_{OC} hold different meanings from those in traditional systems.

For more information about the SolarEdge system's string voltage and current, refer to the *V_{OC} and I_{SC} in SolarEdge Systems Technical Note*, available on the SolarEdge website at:
http://www.solaredge.com/files/pdfs/isc_and_voc_in_solaredge_systems_technical_note.pdf

To verify proper power optimizers connection:

Measure the voltage of each string individually before connecting it to the other strings or to the inverter. Verify correct polarity by measuring the string polarity with a voltmeter. Use a voltmeter with at least 0.1V measurement accuracy.

For troubleshooting power optimizer operation problems, refer to *Power Optimizer Troubleshooting* on page 81.

Chapter 3: Installing the Inverter

Install the inverter either before or after the modules and power optimizers have been installed.

CAUTION!

Do not rest the connectors at the bottom of the inverter on the ground, as it may damage them. To rest the inverter on the ground, lay it on its back.

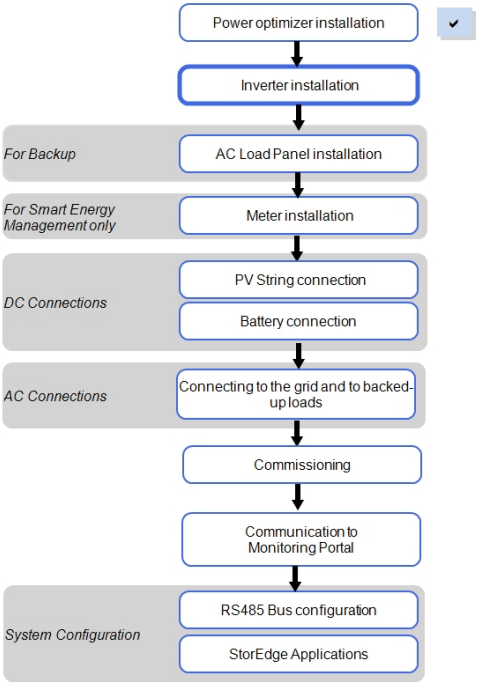

Inverter Package Contents

- One StorEdge inverter
- One mounting bracket
- Two Allen screws for fastening the inverter to the mounting bracket
- SolarEdge activation card
- One 9V battery
- Allen key for opening the StorEdge Connection Unit
- Installation guide (with activation card and instructions)

Identifying the Inverter

Refer to the sticker on the inverter that specifies its **Serial Number** and its **Electrical Ratings**. Provide the serial number when contacting SolarEdge support. The serial number is also required when opening a new site in the SolarEdge monitoring portal.

Inverter Interfaces

The following figure shows the inverter connectors and components, located at the bottom of the inverter.

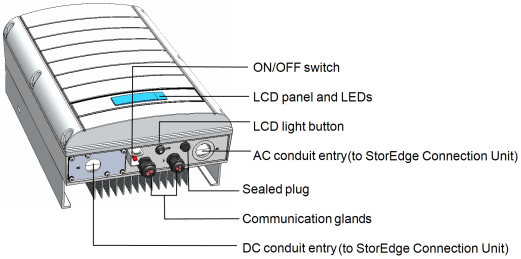

Figure 4: Inverter Interfaces

- **LCD panel**: displays inverter information and configuration parameters
- **LCD LEDs**: Three LEDs indicate the following inverter statuses:

Color	Description	Functionality
Green	Power production	**On** - The inverter is producing power. **Blinking** - Standby mode. The inverter is in Standby mode until its working voltage is reached. The inverter then enters Production mode and produces power. **Off** - The inverter is not producing power. This may be during Night mode, when the inverter ON/OFF switch is OFF or when an error occurs.
Yellow	Module communication and inverter shutdown	**Blinking**: ○ Monitoring information is being received from a power optimizer. ○ The inverter is being shut down.
Red	Fault	**On** - There is an error. Refer to "Troubleshooting" on page 72 for more information. **Blinking** - The inverter is being shut down.

All LEDs turn on while the inverter is being configured.

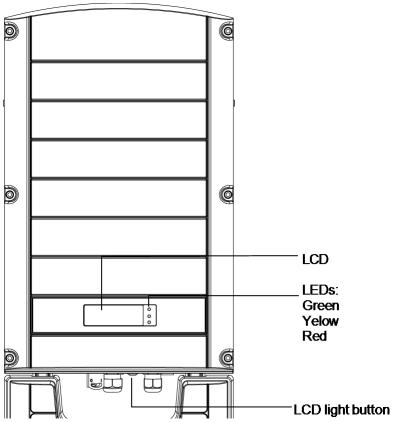

Figure 5: Inverter front view

- **AC and DC conduit entries**: Connection points of the StorEdge Connection Unit.
- **ON/OFF switch**: Turning this switch ON starts the operation of the power optimizers, enables power production and allows the inverter to begin exporting power to the utility grid/backed-up loads. Turning it OFF reduces the power optimizer voltage to a low safety voltage and inhibits exportation of power. When this switch is OFF, the inverter control circuitry remains powered up.
- **LCD light button**: Pressing this button lights up the LCD for 30 seconds. In addition, you can press this button to view inverter status screens and access configuration menu options, as described *Configuring the Inverter Using the LCD Light Button* on page 43.
- **Two communication glands**, for connection of inverter communication options. Each gland has three openings. Refer to *Setting Up Communication to the Monitoring Portal* on page 56 for more information.

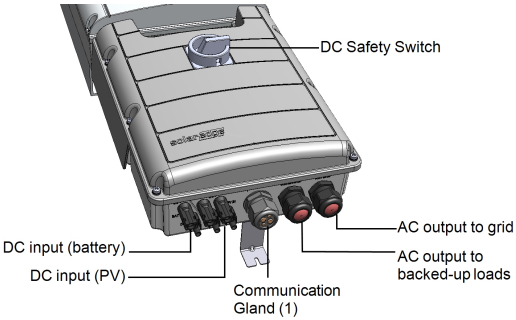

Figure 6: StorEdge Connection Unit

- **DC Safety Switch**: disconnects both the positive and negative conductors of the PV and the positive and negative conductors of the battery.
- **AC output**: Cable glands for connection of grid and backed up loads
- **DC input**: For connection of the PV installation and the battery
- **Communication and control gland**: for connection of inverter communication options, meter, battery thermal power 12V and battery control.

Internal AC Breaker and Bypass Switch

The following components are part of the StorEdge Connection Unit and may be accessed for troubleshooting or maintenance.

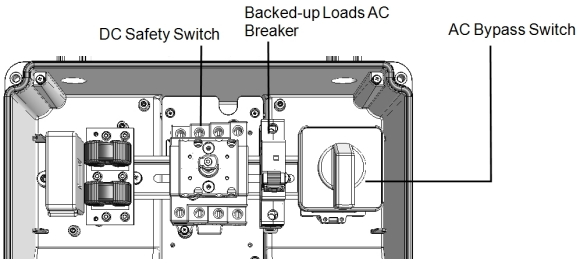

Figure 7: StorEdge Connection Unit

- **Backed-up Loads AC Breaker**: Main AC breaker for the backed-up loads. Ensure this breaker is UP before starting up the system.
- **AC Bypass Switch**: This switch bypasses the inverter functionality in case of inverter malfunction. Maintaining power to the backed-up loads is enabled by connecting the loads directly to the grid.

  There are three switch positions. The following table describes the functionality and use of each position:

Switch position	Use Case	Functionality
1 (left) (Default)	Normal operation	Normal operation. The backed-up loads panel is connected through the software controlled switches to the AC grid (during normal operation), or to the inverter (via auto-transformer, for backup power).
2 (right)	AC bypass	This mode disables the backup functionality. The backed-up loads panel is connected directly to the AC grid through the bypass switch. Use in case of inverter malfunction.
0	Not in use	

Mounting the Inverter

NOTE

Make sure the mounting surface or structure can support the weight of the inverter , and make sure that it spans the width of the bracket.

CAUTION!

HEAVY OBJECT. To avoid muscle strain or back injury, use proper lifting techniques, and if required - a lifting aid when removing or replacing.

1. Determine the inverter mounting location, on a wall, stud framing or pole. To allow proper heat dissipation, maintain the following minimum clearance areas between the inverter and other objects:

- If installing a single inverter:
  - 20 cm (8") to the top of the inverter.
  - 10 cm (4") to the bottom of the StorEdge Connection Unit.
  - 10 cm (4") to the right and left of the inverter.
- If installing multiple inverters:
  - When installing inverters one above the other, leave at least 20 cm(8") between the top of an inverter and the bottom of the StorEdge Connection Unit.
  - When installing inverters side by side, leave 20 cm(8") between inverters.

2. Position the mounting bracket against the wall/pole and mark the drilling hole locations :
   - Ensure that the flat side of the bracket is at the bottom, as in *Figure 8*.
   - Use at least two bracket holes. Additional holes can be used to fix the bracket. Determine which and how many holes to use according to mounting surface type and material.
3. Drill the holes and mount the bracket. Verify that the bracket is firmly attached to the mounting surface.

NOTE

When mounting an inverter on an uneven surface, you may use spacers/ washers behind the top mounting hole of the bracket (see). Depending on the angle, use the appropriate size and number of spacers so that the bracket is perpendicular to the ground. Recommended: a stainless steel 3/4" long screw, with a 1/4" socket button head , two jam nuts and three washers.

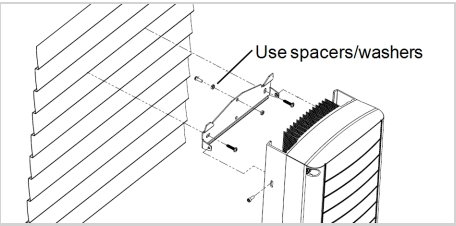

4. Hang the inverter on the bracket (see *Figure 8*): Lift the inverter from the sides, or hold it at the top and bottom of the inverter to lift the unit into place. Do not lift holding the StorEdge Connection Unit as it may be damaged

- Align the two indentations in the inverter enclosure with the two triangular mounting tabs of the bracket, and lower the inverter until it rests on the bracket evenly.

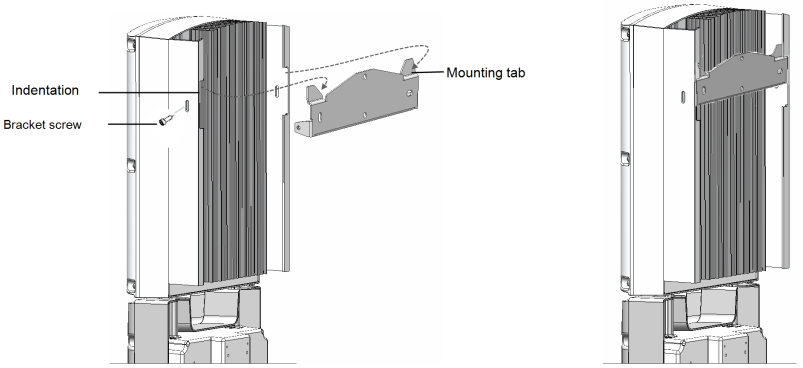

Figure 8: Hanging the inverter on the bracket

5. Secure the StorEdge Connection Unit bracket to the wall:

- Mark the location of the bracket screw for the StorEdge Connection Unit and drill the hole.
- Fasten the bracket using a standard bolt.
- Verify that the bracket is firmly attached to the mounting surface.

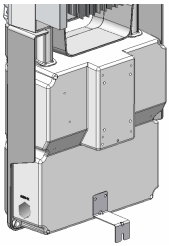

Figure 9: StorEdge Connection Unit bracket

6. Insert the two supplied screws through the outer heat sink fin on both sides of the inverter and into the bracket (see *Figure 8*). Tighten the screws with a torque of 4.0 N*m / 2.9 lb.*ft.

7. Remove the inverter cover: Open the inverter cover's six Allen screws and carefully pull the cover horizontally before lowering it.

Chapter 4: Installing the Backed-up Loads Panel and Meter

This chapter describes installation of the backed-up loads panel and a meter.

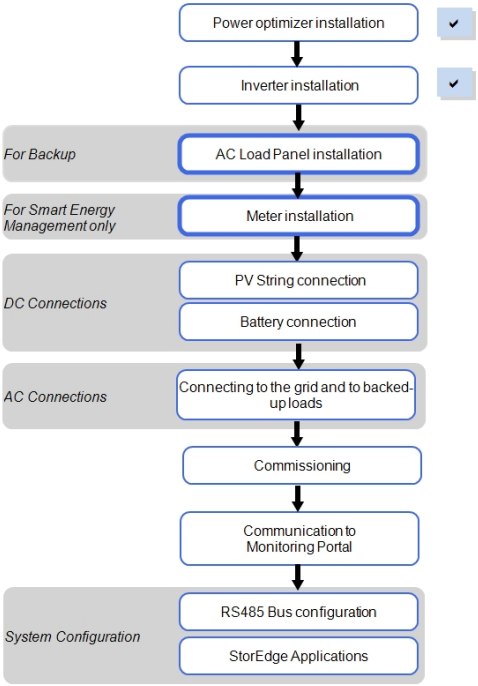

Installing the Backed-up Loads Panel

Install a secondary AC panel for backed-up loads (not supplied by SolarEdge). Rewire the backed-up loads through this panel.

Install one pole 25A as the main circuit breaker.

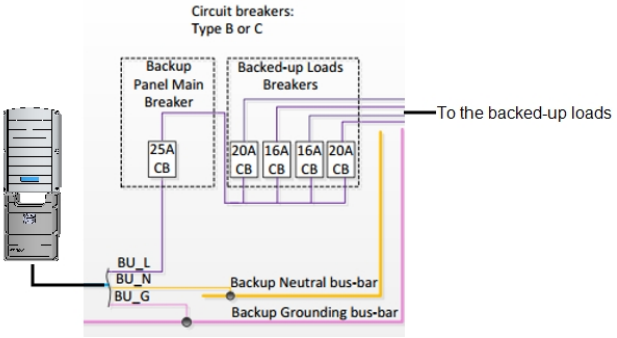

Figure 10: Backed-up Loads Panel

Electricity Meter Installation

The StorEdge solution requires connecting a meter for Smart Energy Management applications, such as maximizing self-consumption. *For backup power only, installing a meter is not required.*

To install the SolarEdge meter, refer to to the installation guide supplied with it: http://www.solaredge.com/files/pdfs/solaredge-meter-installation-guide.pdf.

The meter is connected to the inverter using RS485.

RS485 wiring specifications:

- Cable type: Min. 3-wire shielded twisted pair (a 4-wire cable may be used)
- Wire cross-section area: 0.2-1 mm²/ 24-18 AWG (a CAT5 cable may be used)

NOTE

The inverter RS485 bus should be connected to the battery and meter. Connecting multiple inverters with RS485 master-slave connection requires an RS485 Expansion Kit (available form SolarEdge Refer to http://www.solaredge.com/files/pdfs/RS485_expansion_kit_installation_guide.pdf).

For communication connection refer to *Connecting Communication to the Meter* on page 31.

Chapter 5: StorEdge Inverter Connections

Connect the system components to the StorEdge Connection Unit as described in this chapter.

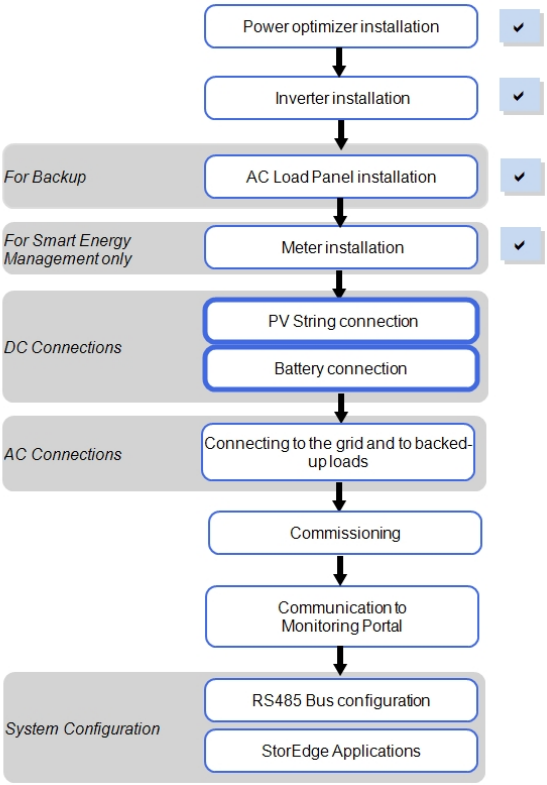

Opening the StorEdge Connection Unit Covers

1. Release the six screws attaching the StorEdge Connection Unit external cover to the enclosure and lift the cover.
2. Open the four internal screws securing the transparent cover to the StorEdge Connection Unit enclosure and remove the cover.

The following figure shows the connections in the StorEdge Connection Unit:

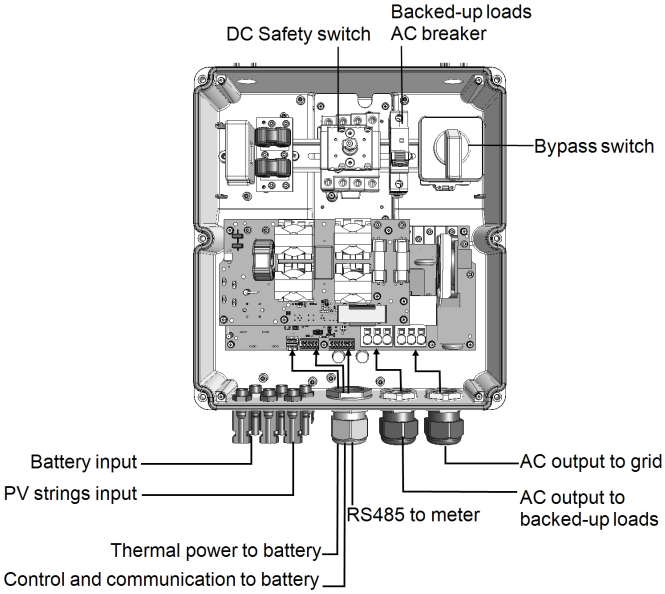

Figure 11: The StorEdge Connection Unit connections

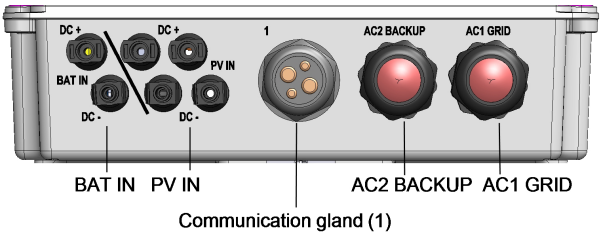

Figure 12: The StorEdge Connection Unit connectors

Installing the 9V Battery

A 9V battery is supplied with the inverter accessories. Install the 9V battery in the holder on the top board of the StorEdge Connection Unit and connect it to the battery pad.

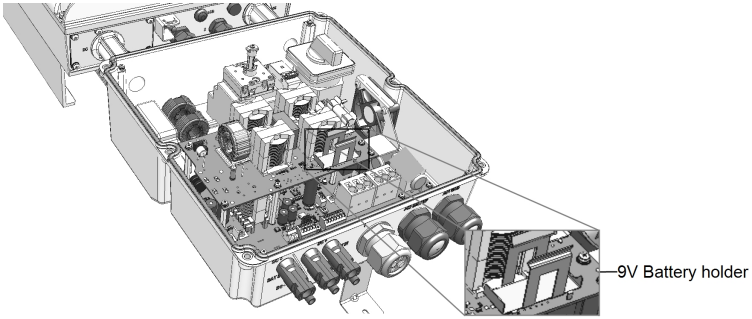

Figure 13: The battery holder

Connecting the Strings to the Inverter

Connect the string to the DC input pairs. If required, connect additional strings in parallel using an external combiner box/branch cables before connecting to the inverter.

NOTE

Functional electrical earthing of DC-side negative or positive poles is prohibited because the inverter has no transformer. Grounding (earth ground) of module frames and mounting equipment of the PV array modules is acceptable.

NOTE

SolarEdge's fixed input voltage architecture enables the parallel strings to be of different lengths. Therefore, they do not need to have the same number of power optimizers, as long as the length of each string is within the permitted range.

Connect the DC connectors of each string to the DC+ and DC- connectors according to the labels on the inverter.

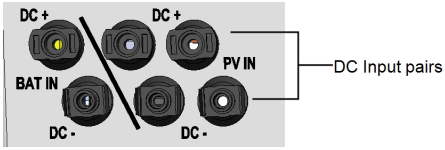

Figure 14: Inverter DC Connections

Connecting to the Battery

Follow these guidelines:

- For easy access to battery connectors, it is recommended to connect the cables to the battery and to set all the battery DIP switches to their correct positions while the battery is still on the ground, *before* mounting the battery according to the manufacturer instructions). The following procedure is recommended:
  a. Connect all the wires to the battery connection panel
  b. Mount the battery
  c. Connect to the StorEdge Connection Unit.

- Measure the necessary length between the StorEdge Connection Unit and the battery for all cables. The maximum distance between the battery and the inverter is 35 ft/ 10m, when using 16AWG/ 1.3mm^2 cables for battery thermal power and 24AWG/0.2mm^2 for battery control.
- Tie and wrap the cables to avoid pulling them out during mounting.
- Be sure to adhere to all safety cautions and information in the battery documentation.
- The battery connects to the DC side of the inverter. Since the inverter DC connections are on its left side, it is recommended to position the battery to the left of the inverter to simplify wiring.

Prepare cables and connect as described in the following table (see *Figure 15*):

Recommended cable type (min-max cross section)	StorEdge Connection Unit connection	Tesla battery connection	Connection method
DC			
DC cable 6mm^2 (4-10 mm^2), 600V insulated.	*BAT IN DC +*	DC+	Inverter side: Connect to the BAT IN connectors
	BAT IN DC-	DC-	
12V thermal power input			
2-wire shielded pair cable 1.5 mm^2 (1.3 - 2.5 mm^2), 600V insulated	Battery Thermal V- (black)	THERMAL -	Insert the cable through one of the large openings in the gland. Push the lever to open the connection, insert the wire and release the lever when the wire is clamped.
	Battery Thermal V+ (red)	THERMAL +	
Control and monitoring			
5-wire shielded twisted pair cable 0.2 mm^2 (0.2 - 1.5 mm^2), 600V insulated. A CAT5 600V insulated can also be used.	5-pin communication terminal block:	communication port 1 (located closer to the DIP switches):	Insert the cable through one of the large openings in the gland. Press the protrusion at the top of the terminal block to open the connection hole, insert the wire and release to spring back and clamp the wire.
	En (Enable)	ENABLE	
	V+	LOGIC +	
	G (RS485)	LOGIC -	
	B- (RS485)[1]	COM LO[1]	
	A+ (RS485)[1]	COM HI[1]	
		Modbus DIP switch setting: ○ S2, S6: Left ○ S1, S5: DOWN ○ S3, S4: UP ID DIP switch setting: All (1,2,3) to the right (0 position)	Refer to *Figure 15* and *Figure 16*

[1] Must be twisted pair

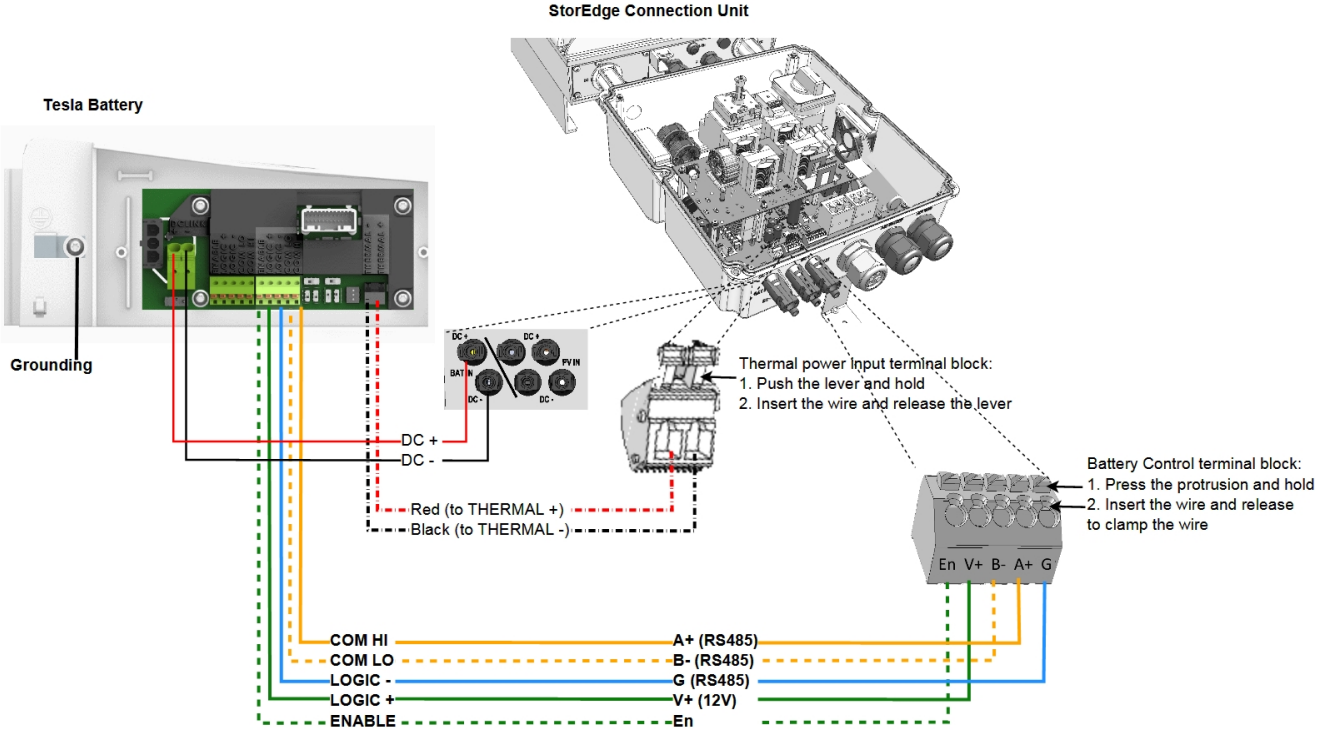

Figure 15: Connections to Tesla PowerWall Battery

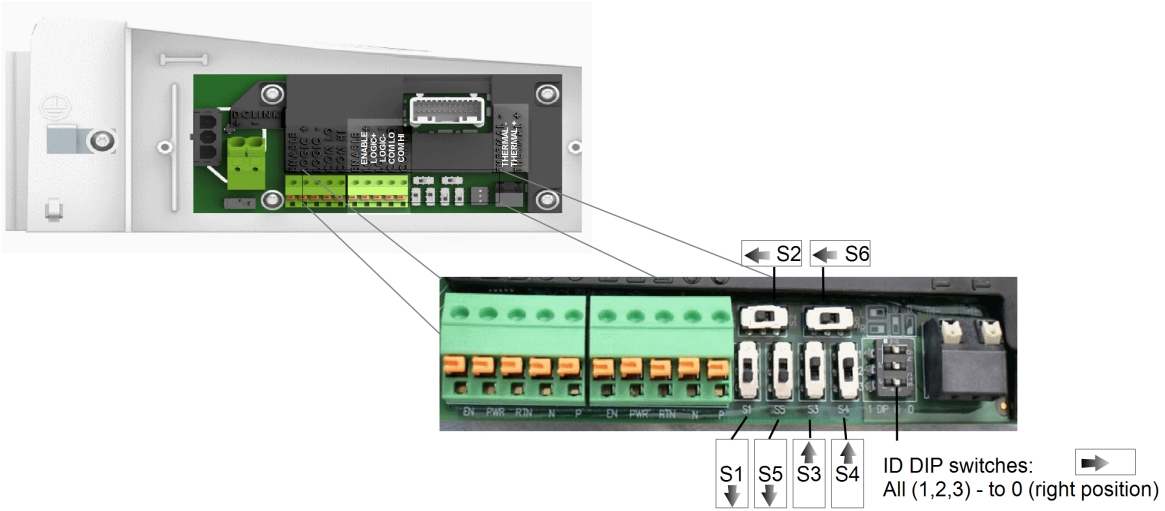

Figure 16: Battery DIP switches

Battery Grounding

You can connect battery grounding cable either to local ground or to the inverter grounding terminal on the AC side. If connecting to the inverter, follow the procedure herein.

To connect grounding to the inverter:

1. Remove the inverter cover as described in *Removing the Inverter Cover* on page 32.
2. Insert the grounding cable using one of the following methods (see *Figure 17*):
   - Option 1 - Via the StorEdge Connection Unit glands through the conduit connecting the unit to the inverter
   - Option 2 - Directly to the inverter AC terminal via one of the communication glands.
3. Connect the cable to the connection labeled ⏚ on the terminal block.

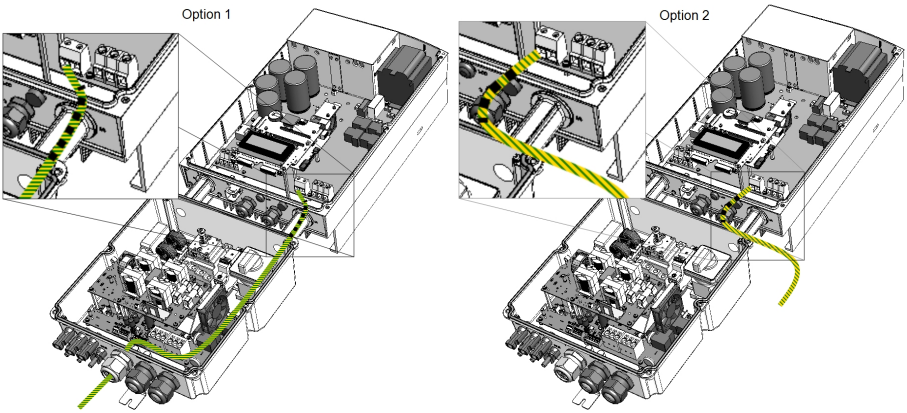

Figure 17: Routing grounding cable fro the battery

Connecting to the AC Grid and to Backed-up Loads

Use a 6 mm² 3-wire cable. The maximum wire size for the input terminal blocks is 10 mm².

NOTE

If there are multiple inverters in the installation, each inverter should be connected to a separate backed-up loads panel. Do not share backup output between inverters.

1. Turn OFF the AC before connecting the AC terminals.

WARNING!

If connecting equipment grounding wire, connect it before connecting the AC Line and Neutral wires.

2. Strip 58 mm / 2.32" of the external cable insulation and strip 8 mm / 0.32" of the internal wire insulation.

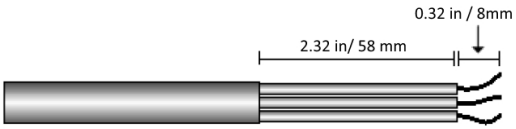

Figure 18: Insulation stripping – AC (3-wire cable)

3. Insert the cable through the appropriate cable gland:
   - For connection to the grid (from the main distribution panel): AC1 GRID
   - For connection to backed-up loads (from a backed-up loads panel): AC2 BACKUP
4. Connect the AC wires according to the labels on the terminal blocks: Use a standard flat-blade screwdriver to connect the wires to the spring-clamp terminals:
   a. Insert the screwdriver into the square opening at the top of the terminal block and press to open clamp mechanism.
   b. Insert the wire into the round opening and release the screwdriver to spring back and clamp the wire.
5. Tighten the AC cable gland with a torque of 2.8-3.3 N*m / 2.0-2.4 lb*ft.

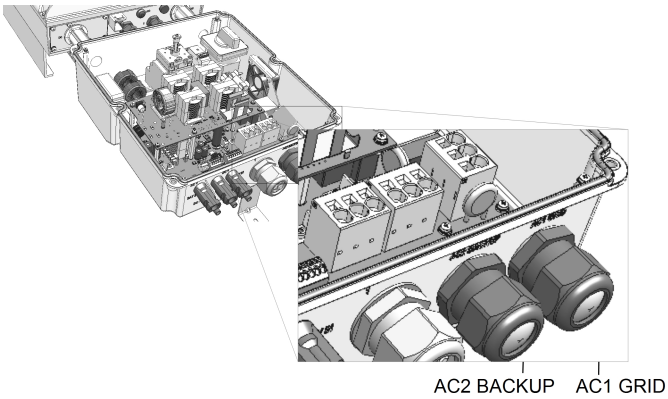

Figure 19: Connection to grid and backed-up loads

Connecting Communication to the Meter

If a meter was installed, connect it to the StorEdge Connection Unit as described in the following table. For detailed information refer to the installation guide supplied with the meter.

Recommended cable type (min-max mm^2)	StorEdge Connection Unit	Meter connection
RS485 0.2 mm^2 (0.2 - 1.5 mm^2), shielded twisted pair, 600V insulated	Ext. Devices 7-pin terminal block: B, A, G	RS485 4-pin terminal block: B, A, G

Insert the cable from the meter through the communication gland (labeled **1**).

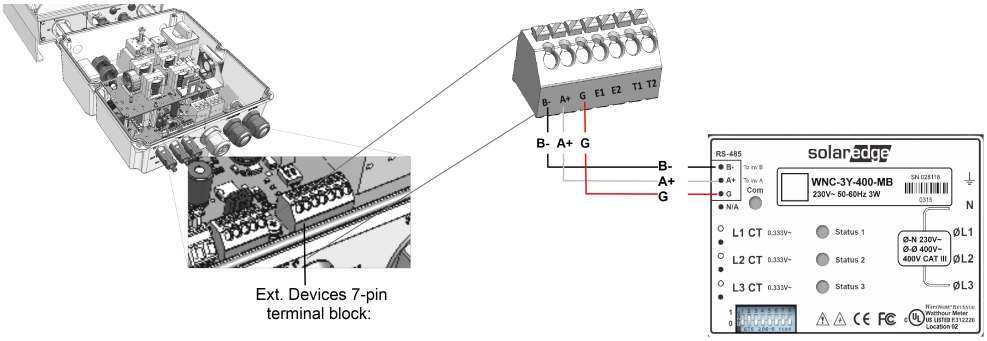

Figure 20: Connection to a meter (SolarEdge)

Chapter 6: Commissioning the Installation

This chapter describes how to activate the system, pair the power optimizers to the inverter and verify the proper functioning of the system.

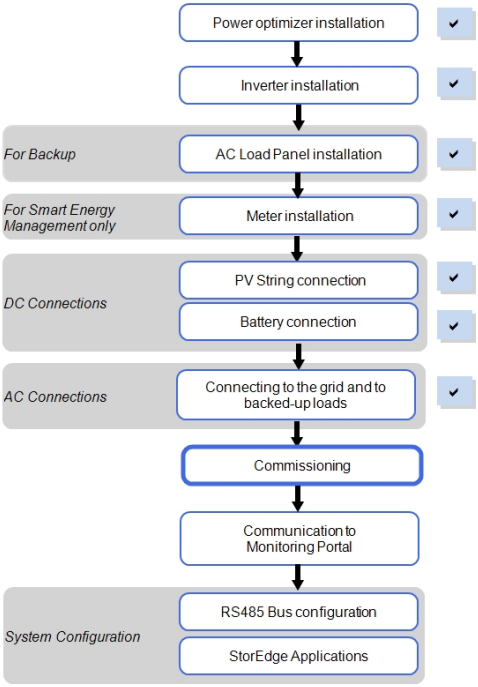

Removing the Inverter Cover

Use the following procedure for cover removal for communication connection or maintenance.

1. Turn OFF, or verify that the inverter ON/OFF switch is OFF.
2. Verify that AC to the inverter is OFF, or disconnect the AC to the inverter by turning OFF the circuit breakers on the distribution panel. Wait 5 minutes for the capacitors to discharge.
3. Open the inverter cover's six Allen screws and carefully pull the cover horizontally before lowering it.

CAUTION!

When removing the cover, make sure not to damage internal components. SolarEdge will not be held responsible for any components damaged as a result of incautious cover removal.

Step 1: Activating the System

1. Verify that the inverter ON/OFF switch is OFF.
2. Move the StorEdge Connection Unit switch to the ON position.
3. If not already removed, remove the inverter cover: Open the inverter cover's six Allen screws and carefully pull the cover horizontally before lowering it.

WARNING!

ELECTRICAL SHOCK HAZARD. Do not touch uninsulated wires when the inverter cover is removed.

4. Activate the inverter:
   a. Verify that the card S/N matches the inverter S/N.
   b. Insert the card into the slot marked "**CARD**" on the communication board.
   c. Turn AC ON.
   d. LCD shows: `Running Script...` → `Done!`

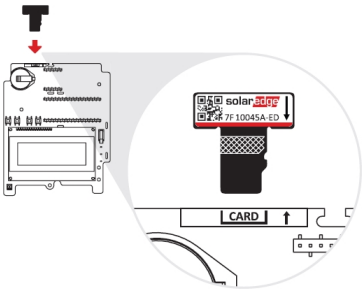

Figure 21: Activation card

If LCD shows: `Script error`:

- Turn AC OFF and ON (reset), and repeat the activation process.
- Use the activation code that appears on the certification inverter label to manually activate the inverter.
- If the problem persists, contact SolarEdge Support.

NOTE

You can use the activation code that appears on the certification inverter label to activate the inverter in case of a script error or a missing activation card.

5. Verify that the inverter is configured to the proper country: Press the LCD light button until reaching the ID status screen:

```
DSP1/2:1.0210/1.0034
CPU:0003.14xx
Country:ESP
```

6. If required, perform the following additional steps before closing the inverter cover:
   - Country settings or inverter configuration using the internal LCD user buttons – refer to *Country and Grid* on page 45.
   - Communication options connection – refer to *Setting Up Communication to the Monitoring Portal* on page 56.
   - StorEdge application configuration - refer to *System Configuration* on page 64.
7. Close the inverter cover by tightening the screws with a torque of 9.0 N*m/ 6.6 lb*ft. For proper sealing, first tighten the corner screws and then the two central screws. The following figure illustrates recommended order:

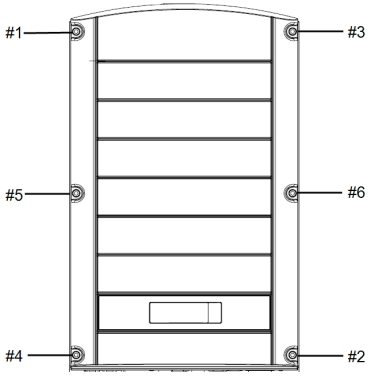

Figure 22: Tightening order of the screws

8. Make sure the AC Bypass switch in the StorEdge Connection Unit is switched to the left (position 1).
9. Make sure the backed-up loads AC breaker in the StorEdge Connection Unit is UP.

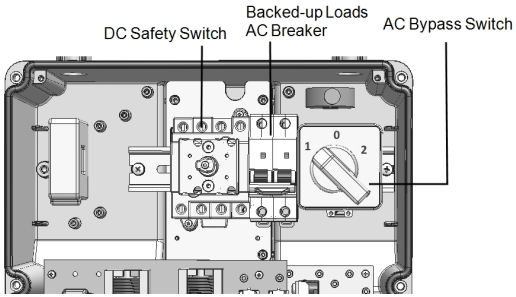

Figure 23: StorEdge Connection Unit

10. Close the StorEdge Connection Unit cover: Attach the cover and secure it by tightening the six screws with a torque of 1.2 N*m / 0.9 ft.*lb.

11. Turn ON the StorEdge Connection Unit. If an additional external DC switch is installed between the power optimizers/ battery and the inverter(s) then turn it ON.

    A status screen similar to the following appears on the LCD panel:

```
Vac[V]  Vdc[V]  Pac[w]
240.7    14.1    0.0
P_OK:  000/000  <S_OK>
                  OFF
```

12. Verify that the following information appears on the LCD panel:

- **P_OK**: Appears only upon pairing process completion and first telemetry reception from the power optimizers. Indicates connection to the power optimizers and that at least one power optimizer is sending monitoring data. If P_OK does not appear, check the power optimizer, string and DC input connections.
- **000/000**: Appears only upon first telemetry reception from the power optimizers. Indicates the number of power optimizers that have been paired to this inverter. At this stage, the number should be 000, since no power optimizers have been paired.
- **S_OK**: the connection to the SolarEdge monitoring portal is successful (should appear only if the inverter is connected to the server). If S_OK is not displayed and the inverter is connected to the server, refer to "Troubleshooting" on page 72.
- **Vac [V]**: the grid AC output voltage. Verify the correct value.
- **Vdc [V]**: The DC input voltage of the longest string connected to the inverter. There should be a safety voltage of 1V for each power optimizer in the string.

NOTE

A measurement error on the inverter LCD of ±3 V is acceptable.

- **Pac [w]**: the AC output power (should be **0.0** since the inverter is OFF).
- **OFF**: the inverter ON/OFF switch is in the OFF position.

Step 2: Pairing Power Optimizers to the Inverter

Once all connections are made, all the power optimizers must be logically paired to their inverter. The power optimizers do not start producing power until they are paired with an inverter . This step describes how to assign each inverter to the power optimizers from which it will produce power.

Perform this step when the modules are exposed to sunlight. If the string length is changed or a power optimizer is replaced, repeat the pairing process.

1. Perform pairing: Press and hold down the inverter LCD button for about **10 seconds**. The following message is displayed:

```
Keep holding button
for pairing, release
to enter menu...
Remaining:      3 sec
```

   Keep holding for 5 seconds until the following is displayed:

```
Pairing

Turn Switch To On
```

2. Turn the inverter ON/OFF switch to ON within 5 seconds. If you wait longer than 5 seconds the inverter exits the pairing mode. The following message is displayed indicating that the inverter is performing the pairing:

```
Pairing

Remaining [sec]:180
```

3. Wait for the completion of the pairing (remaining seconds is 0). If pairing fails, an error is displayed. In this case, repeat the pairing steps. If the problem persists, contact SolarEdge Support. When pairing succeeds, the following message is displayed:

```
Pairing

Pairing Completed
```

The system startup process begins:

Since the inverter is ON, the power optimizers start producing power and the inverter starts converting AC.

WARNING!

When you turn ON the inverter ON/OFF switch, the DC cables carry a high voltage and the power optimizers no longer output a safe 1V output.

When the inverter starts converting power after the initial connection to the AC, the inverter enters Standby mode until its working voltage is reached. This mode is indicated by the flickering green inverter LED.

While the inverter is in Standby mode, it monitors the grid and verifies correct grid voltage and frequency. The following message is displayed:

```
Waking Up...
Remaining: 051 Sec
```

The countdown indicates the seconds remaining until entering the Production mode. This time is in accordance with local regulations and is typically between three to five minutes.

When countdown is complete, the inverter enters Production mode and produces power. The steadily lit green inverter LED indicates this mode.

Step 3: Verifying Proper Operation

After the wake-up time is over, a status screen similar to the following appears on the inverter LCD panel:

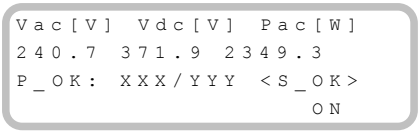

1. Verify the following:

- The green inverter LED is steadily lit.
- The ON/OFF indicator on the LCD panel reads **ON**.
- **P_OK: XXX/YYY**: There is a connection to the power optimizers and at least one power optimizer is sending monitoring data. Optimizers send telemetries in a frequency of up to 10 minutes. Initially after pairing, both XXX and YYY values show 000 and the values increase as paired power optimizers are reported.

NOTE

It may take up to 20 minutes for all power optimizers to transmit their telemetries and to be counted on the LCD screen.

- **S_OK** appears, if the inverter is connected to the SolarEdge monitoring portal.
- **Vac [V]** specifies the measured grid AC output voltage.
- **Vdc [v]** : Specifies the DC input voltage, which should equal the sum of the output voltages of all modules (and should be within the operating range of the inverter).
- **Pac [W]** specifies the total AC output power produced.

2. Take note of the serial # on the inverter label using the detachable 2D barcode sticker on each device. This information is used in the SolarEdge monitoring portal to identify this inverter and is needed to open a new site in the monitoring portal.

Your SolarEdge power harvesting system is now operational.

Step 4: Reporting and Monitoring Installation Data

NOTE

This step requires connecting one of the communication options. Refer to *Setting Up Communication to the Monitoring Portal* on page 56.

The SolarEdge Monitoring System

The SolarEdge monitoring portal enables accessing SolarEdge site information, including up-to-date information viewed in a physical or logical view.The monitoring portal is described in detail in the *SolarEdge Monitoring Portal User Guide*, available on the SolarEdge website at http://www.solaredge.com/files/pdfs/solaredge-monitoring-portal-user-guide.pdf. The SolarEdge monitoring portal can display logical and physical layouts of the installed system, as follows:

- **Logical Layout**: Shows a schematic logical layout of the components in the system, such as: inverters, strings and modules, as well as their electrical connectivity. This view enables you to see which modules are connected in each string, which strings are connected to each inverter, and so on.
- **Physical Layout**: Shows a schematic physical layout of the components in the system, such as: inverters, strings and modules, as well as their electrical connectivity. This view enables a bird's eye view of the actual location of a system component.

Using the portal, you can:

- View the latest performance of specific components.
- Find under-performing components, such as modules, by comparing their performance to that of other components of the same type.
- Pinpoint the location of alerted components using the physical layout.
- See how components are connected to each other.
- Pair power optimizers remotely.

To display a logical layout, insert the inverter serial number in the new site created in the application. When the communication between the inverter and the monitoring server is established, the logical layout is displayed.

To display a physical layout, you need to map the locations of the installed power optimizers. To generate a physical mapping, use either the Site Mapper application or a mapping template, which should be filled out using the detachable stickers (see *Providing Installation Information*, below).

The logical and physical mapping can be used for debugging a problem using the SolarEdge monitoring portal.

If you do not report the physical and logical mapping of the installed power optimizers to SolarEdge, the SolarEdge monitoring portal will show the logical layout indicating which power optimizers are connected to which inverter, but will not show strings or the physical location of power optimizers.

The inverter may be connected to the SolarEdge monitoring portal via LAN or via an external modem connected to the inverter's RS232 connector. Alternatively, you can connect the inverter to another inverter that is already connected to the server, in a master-slave configuration. Refer to *Setting Up Communication to the Monitoring Portal* on page 56 .

Providing Installation Information

Paper Template

Fill out the Physical Layout Template (downloadable from the SolarEdge site) using the detachable 2D barcode stickers on each power optimizer. Once the form is completed, scan it and upload the scanned file to the SolarEdge monitoring portal during site registration. For an example paper template, refer to http://www.solaredge.com/files/pdfs/physical-layout-template.pdf.

Site Mapper

Use the SolarEdge Site Mapper smartphone application to scan the power optimizer and inverter 2D barcodes. The application creates an XML file that can be uploaded to the SolarEdge monitoring portal during site registration. The SolarEdge Site Mapper can be downloaded from the application stores.

For detailed information, refer to the *SolarEdge Site Mapper Software Guide or to the Site Mapper* demo movie, available on the SolarEdge website at http://www.solaredge.com/groups/installer-tools/site-mapper.

Creating a Site in the SolarEdge Monitoring Portal

Create the site in the monitoring portal using the registration form available at http://www.solaredge.com/groups/site-registration. Fill out all required information in the form, which includes information about your installation, as well as details about its logical and physical mapping.

Chapter 7: User Interface

LCD User Buttons

Four buttons are located inside the inverter above the LCD panel and are used for controlling the LCD menus, as shown below:

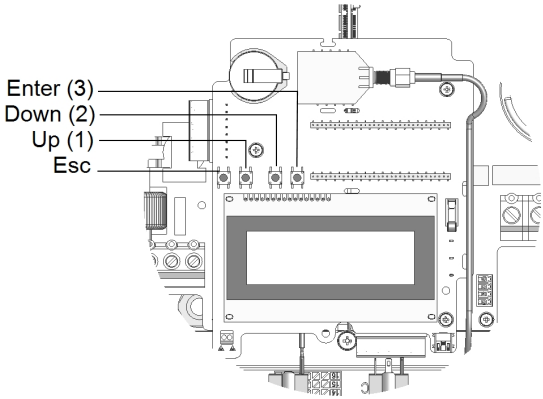

Figure 24: LCD Internal menu buttons

Use the four user buttons to control the LCD panel menus:

- **Esc**: Moves the cursor (>) to the beginning of the currently displayed parameter; goes to the previous menu, and cancels a value change with a long press (until **Aborted** is displayed).
- **Up** (1) and **Down** (2): Moves the cursor from one menu option to another, moves among the characters of a displayed parameter, and toggles between possible characters when setting a value.
- (3): Selects a menu option and accepts a value change with a long press (until **Applied** is displayed).

Use the three rightmost buttons for entering **123** when entering the Setup mode password **12312312**.

The LCD screen displays status information of the system and various menus for configuration options. The LCD panel and buttons are used during the following processes:

- **Operational mode**: The LCD panel allows checking for proper system operation. Refer to *Status Screens - Operational Mode* on page 49 for a description of this option. .
- **Setup mode**: Upon installation, a field technician or an installer may perform basic configuration
- **Error messages**: In the event of a problem, an error message may be displayed on the LCD panel.

Inverter Configuration – Setup Mode

You can configure the inverter using one of the following:

- The internal LCD user buttons. When using this option, the inverter cover is removed.
- The external LCD light button. This option of configuration includes a less detailed configuration menu.

Configuring the Inverter Using the LCD User Buttons

After inverter installation, a field technician or an installer may perform basic system configuration. Configuration is done when the inverter is in Setup mode.

To enter Setup mode:

1. Turn the inverter ON/OFF switch to OFF (AC remains ON).

WARNING!

If the inverter was operating properly (power was produced by the power optimizers), the following message is displayed.

```
DC VOLTAGE NOT SAFE
DO NOT DISCONNECT
VDC: 72.0
```

This message is displayed until the DC voltage is safe (50V). Do not open the cover until the voltage is safe or until at least five minutes have passed.

2. Press the Enter button for at least 5 seconds. The following message is displayed:

```
Please enter
 Password
********
```

3. Use the three rightmost internal LCD user buttons to type in the following password: **12312312**. The following message is displayed:

```
Country <Italy>
Language <Eng>
Communication
Device Manager
Power Control
Backup Conf <Dis>
Display
Maintenance
Information
```

The inverter is now in Setup mode and all its LEDs are lit. The inverter automatically exits Setup mode if no buttons are pressed for more than 2 minutes.

The following shows a hierarchical tree of the menu options, which are described in *Configuration Menu Options* on page 45. Actual menus may vary from shown depending on the firmware version of the inverter and on the country.

Main menu:

```
Country <Italy>
Language <Eng>
Communication
Device Manager
Power Control
Backup Conf <Dis>
Display
Maintenance
Information
```

Country:

```
Germany+
Spain
France
.
.
.
```

Language:

```
English
German
Spanish
French
Italian
```

Communication[1]

```
Server<LAN>
LAN Conf
RS485-1 Conf<S>
ZigBee Conf<S>
Wi-Fi Conf<N/A>
RS232 Conf
Cellular Conf
GPIO Conf <MTR>
```

[1] If ZigBee is connected, the Wi-Fi Conf menu is not displayed. If ZigBee is not connected, ZigBee Conf and Wi-Fi Conf are both displayed with <N/A>.

Power Control:

```
Grid Control <En>
Energy Manager
RRCR Conf.
Reactive Pwr Conf.
Active Pwr Conf.
Phase Balance <Dis>
Wakeup Conf.
P(f)
Advanced
Load Defaults
```

Display:

```
Temperature <C>
LCD On Time <30>
TLM On Time <15>
```

Maintenance:

```
Date and Time
Reset Counters
Factory Reset
SW Upgrade SD-Card
Diagnostics
Standby Mode
Grid Protection
```

Information:

```
Versions
Error Log
Warning log
Hardware IDs
```

Configuring the Inverter Using the LCD Light Button

Use the LCD light button for communication setup and for displaying the Error log and Warning Log . There are fewer menus available when using this configuration option; however, the functionality of these menus is the same as when using the internal LCD user buttons.

1. Turn the inverter ON/OFF switch to OFF.
2. Press and hold down the LCD light button until the following message is displayed:

```
Keep holding button
for pairing, release
to enter menu...
Remaining:     3 sec
```

Releasing the button displays the following menu:

```
Optimizer pairing
Language <eng>
Communication
Maintenance
Information
Exit
```

3. Short-press (one second) to scroll down to the next menu option, and long-press (three seconds) to select the item. You can use the **Exit** option in these menus to move up one menu level or to exit the Setup mode from the main menu.

The following shows a hierarchical tree of the menu options that appear when using the LCD light button:

Main menu:

```
Optimizer pairing
Language <eng>
Communication
Maintenance
Information
Exit
```

Language:

```
English
German
Spanish
French
Italian
Exit
```

Communication[1]:

```
Server<LAN>
LAN Conf
RS485-1 Conf<S>
ZigBee Conf<S>
Wi-Fi Conf<N/A>
GPIO Conf <MTR>
RS232 Conf
Cellular Conf
Exit
```

Information:

```
Versions
Error Log
Warning log
Hardware IDs
Exit
```

Maintenance:

```
Date and Time
Reset Counters
Factory Reset
SW Upgrade SD-Card
Diagnostics
Standby Mode
Grid Protection
Exit
```

The options presented in these menus are described in the next section.

[1] If Wi-Fi is connected, the ZigBee Conf menu is not displayed, and vice versa.

Configuration Menu Options

Country and Grid

1. Select the **Country** option to specify the country in which the inverter is installed and the grid to which it is connected. This parameter may arrive pre-configured. If so, verify that it is set to the proper country.

   WARNING!

   The inverter must be configured to the proper country in order to ensure that it complies with the country grid code and functions properly with that country grids.

   A list of countries is displayed. If no country is configured, the value is <**NONE**>.

   NOTE

   If an inverter is not configured to any country, it will not produce energy, and the following message will be displayed on the LCD:

   `No Country Selected`

   A plus sign (+) near the country indicates that another menu will be displayed after selection.
2. Confirm your country selection in the confirmation screen: Toggle to **YES** and press **Enter**.

Language

1. Select the **Language** option to set the language in which the LCD should display.
2. Confirm your language selection in the confirmation screen: Toggle to **YES** and press **Enter**.

Communication

1. Select the **Communication** option to define and configure:
   - The communication option used by the inverter to communicate with the SolarEdge monitoring portal
   - The communication option used to communicate between multiple SolarEdge devices or other external non-SolarEdge devices, such as electricity meters or loggers.
2. Select **Server** to set which communication method is used to communicate between devices and the SolarEdge monitoring portal. Refer to for a full description of these communication options.

NOTE

The Server menu shows only the communication options installed in the inverter.

The following shows a hierarchical tree of the menu options in the **Communication** menu.

For detailed information about all the configuration options, refer to the *Communication Options Application Note*, available on the SolarEdge website at http://www.solaredge.com/files/pdfs/solaredge-communication_options_application_note_v2_250_and_above.pdf..

Communication[1]:

```
Server<LAN>
LAN Conf
RS485-1 Conf<S>
ZigBee Conf<S>
Wi-Fi Conf<N/A>
RS232 Conf
Cellular Conf
GPIO Conf <MTR>
```

Server:

```
LAN
RS485
Zigbee
Wi-Fi
Cellular
RS232
None
```

LAN Conf:

```
IP Config
Set DHCP <en>
Set IP
Set Mask
Set Gateway
Set DNS
Set Server Addr
Set Server Port
```

RS485-1 Conf:

```
Device Type <SE>
Protocol <M>
Device ID <1>
Slave Detect <#>
Slave List <#>
```

ZigBee Conf. (enabled only if the ZigBee internal module is connected):

```
Device Type<SE>
Protocol<MP>
Device ID<1>
PAN ID
Scan Channel
Load ZB Defaults
Profile<ZB2007>
```

[1] If ZigBee is connected, the Wi-Fi Conf menu is not displayed. If ZigBee is not connected, ZigBee Conf and Wi-Fi Conf are both displayed with <N/A> and their menus are not accessible.

Wi-Fi Conf (enabled only if the internal module is connected):

```
Scan Networks
Set key
Load Defaults
```

RS232 Conf:

```
Device Type<SE>
Protocol<GSM>
Set APN
Set Modem Type
Set User Name
Set Password
```

GPIO Conf:

```
Device Type <RRCR>
```

Power Control

For detailed information about active and reactive power control options refer to the *Power Control Application Note*, available on the SolarEdge website at http://www.solaredge.com/files/pdfs/application_note_power_control_configuration.pdf.

```
Grid Control <En>
Energy Manager
RRCR Conf.
Reactive Pwr Conf.
Active Pwr Conf.
Phase Balance <Dis>
Wakeup Conf.
P(f)
Advanced
Load Defaults
```

The Grid Control option is disabled by default. Enabling it opens additional options in the menu, as shown on page 41.

Display

Select **Display** to set the following:

```
Temperature <C>
LCD On Time <30>
TLM On Time <15>
```

- **Temperature**: Select Celsius or Fahrenheit units.
- **LCD On Time <30>**: The number of seconds that the LCD backlight is ON after pressing the LCD light button. Set a value within the range of 10-120 seconds.
- **TLM On Time <15>**: The number of minutes that the LCD backlight is ON while viewing the Telemetry window. Set a value within the range of 1-120 minutes.

Maintenance

Select **Maintenance** to set the following options:

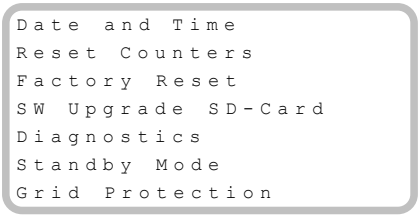

- **Date and Time**: Set the internal real-time clock. If connected to the SolarEdge monitoring portal, the date and time are set automatically and only time zone should be set.
- **Reset Counters**: Resets the accumulated energy counters that are sent to the SolarEdge monitoring portal
- **Factory Reset**: Performs a general reset to the default device settings.
- **SW Upgrade SD-Card**: Perform a software upgrade using an SD card.
- **Diagnostics**: Displays the Isolation Status and optimizers status screens. Refer to www.solaredge.com/files/pdfs/application_note_isolation_fault_troubleshooting.pdf.
- **Standby Mode**: Enables/disables Standby Mode - for remote commissioning.
- **Grid Protection**: Available in specific countries. Enables viewing and setting grid protection values. Refer to http://www.solaredge.com/files/pdfs/viewing_grid_protection_values.pdf.

Information

Select **Information** to display the following options:

- **Versions**: Displays inverter firmware versions:
  - **ID**: The inverter ID.
  - **DSP 1/2**: The DSP digital control board firmware version
  - **CPU**: The communication board firmware version

NOTE

Please have these numbers ready when you contact SolarEdge Support.

- **Error Log**: Displays the last five errors.
- **Warning Log:** Displays the last five warnings.

- **Hardware IDs**: Displays the following HW serial numbers (if exist, and connected to the inverter):
  - **ID**: the inverter's ID
  - **RGM1**: Modbus meter (with lower Modbus ID)
  - **RGM2**: A second external Modbus meter (with the higher Modbus ID)
  - **ZB**: Zigbee MAC address
  - **Cell**: MEID (CDMA) or IMEI (GSM)
  - **WiFi**: Wi-Fi MAC address

Status Screens - Operational Mode

Additional presses display the following screens one after the other.

Initial Status

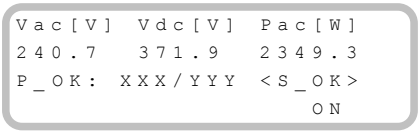

- **Vac [V]**: The AC output voltage
- **Vdc [V]**: The DC input voltage
- **Pac [W]**: The AC output power

Main Inverter Status

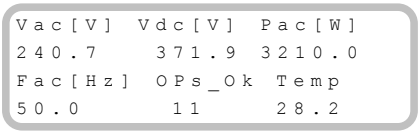

- **Vac [V**: The AC output voltage.
- **Vdc [V]**: The DC input voltage.
- **Pac [W]**: The AC output power.
- **Fac [Hz]**: The AC output frequency.
- **OPs_Ok**: Number of optimizers sending telemetries (indicating that they are paired)
- **Temp [C or F]**: The inverter heat sink temperature

Energy Meter Status

Displays the total energy produced during the last day, month, year and since inverter installation.

```
Day[Wh]:          0.0
Month[KWh]:       0.0
Year[KWh]:        0.0
Total[KWh]:       0.0
```

If a meter is connected to the inverter, the following status screen, showing the power and energy readings, is displayed instead of the above screen.

If the meter is set to Export +Import, there are two status screens, with the first line displaying: "Export Meter" or "Import Meter". The following is an example of an export meter status:

```
Export Meter
Status:       <OK/Error#>
Power[W]:         xxxxx.x
Energy[Wh]:      XXXXX.X
```

- **Status**: Displays OK if the meter is communicating with the communication board.
- **<Error message>**: If there is a meter error, it is displayed in this line. Refer to *Meter Troubleshooting* on page 73.
- **Power (W)**: Depending on the meter type connected to the inverter, this line displays the exported or imported power in Watts.
- **Energy (Wh)**: The total energy read by the meter, in Watt/hour. The value displayed in this line depends on the meter type connected to the inverter and its location:
  - If a bidirectional meter is connected at the consumption point, this value is the consumed energy.
  - If the meter is installed at the production connection point, this value is the energy produced by the site.
  - If the meter is installed at the grid connection point, this value is the energy exported to the grid.

  If the inverter is connected to the SolarEdge server, this value will also be displayed in the monitoring portal.

NOTE

This data is accumulated according to an internal real-time clock.

Telemetry Status

This screen displays the last power optimizer telemetry received. The display changes as each power optimizer sends its telemetry.

In order to verify proper installation, the installer may view the Telemetry window for some time in order to observe the power optimizers' report process.

```
Module: 10288063 1B
Energy[Wh]:56.7
Vdc_O[V]: 40.0
Vdc_I[V]: 38.3
I_in[A]: 7.8
Temp[C]: 28.0
Last Telem: 14:57:17
```

- **Module**: Power optimizer serial number
- **Energy**: power optimizer energy
- **Vdc_O**: Power optimizer output voltage
- **Vdc_I**: Power optimizer input voltage (module voltage)
- **I_in**: Power optimizer input current
- **Temp**: Power optimizer temperature
- **Last Telem**: The laste reading sent to the inverter

ID Status

This screen displays the inverter software version and the country to which the inverter is configured.

```
DSP1/2:1.0210/1.0034
CPU:0003.14xx
Country:ESP
```

- **ID**: The inverter ID.
- **DSP 1/2**: The DSP digital control board firmware version
- **CPU**: The communication board firmware version
- **Country**: the current country setting

Server Communication Status

```
Server:LAN   <S_OK>
Status:        <OK>
     xxxxxxxx
<ERROR MESSAGE>
```

NOTE

If the connection method is CDMA (Cellular) or GSM, the server screen is replaced with the Cellular or GSM status screens (see *Status Screens - Operational Mode* on page 49 and *GSM Status* on the next page).

- **Server**: The method of connection to the SolarEdge monitoring portal.
- **S_OK**: The connection to the SolarEdge monitoring portal is successful (should appear only if the inverter is connected to the server).
- **Status**: Displays OK if the inverter established successful connection and communication with the specified server port/device (LAN, RS485, Wi-Fi or ZigBee module).
- **xxxxxxxx**: Eight-bit Ethernet communication connection status: A string of 1s and 0s is displayed. 1 indicates OK, 0 indicates an error. For a list of the possible errors and how to troubleshoot them, refer to *Communication Troubleshooting* on page 72.
- **Error message**, according to failure. Refer to *Error Codes* on page 76.

IP Status

This screen describes the Ethernet configuration: IP, Mask, Gateway and MAC address (Media Access Control) of the Inverter.

```
IP  192.168.2.119
MSK  255.255.255.0
GW  192.168.2.1
MAC  0-27-02-00-39-36
```

ZigBee Status

This screen describes the ZigBee configuration:

```
PAN:XXXXX
CH:XX/XXXX  RSSI:<L>
MID:XXXX  XX
```

- **RSSI**: The receive signal strength indication of the closest ZigBee in the system. L = low, M = medium, H = high and
  (-) = no signal.
- **PAN ID**: The ZigBee transceiver PAN ID
- **Ch.**: The ZigBee transceiver channel
- **ID**: The ZigBee transceiver ID
- **MID**: The Master ID of the coordinator (master) ZigBee module. This field is shown only in devices with router (slave) ZigBee modules, and after a successful ZigBee association. If a ZigBee module is not connected, a **No ZigBee** message is displayed instead of the **MID** field.

Wi-Fi Status

This screen describes the Wi-Fi configuration:

```
IP:  192.168.2.119
GW:  192.168.2.1
SSID:  xxxxxxxx
RSSI:  <L/M/H/->
```

- **IP**: The DHCP provided address
- **GW**: The gateway IP address
- **SSID**: Service Set Identifier - the name of a wireless local area network (WLAN). All wireless devices on a WLAN must employ the same SSID in order to communicate with each other.
- **RSSI**: The receive signal strength indication of the closest Wi-Fi in the SolarEdge system. L = low, M = medium, H = high
  and - = no signal.

GSM Status

If a GSM modem is connected, this screen replaces the Server status screen:

```
Server:Cell   <S_OK>
Status:         <OK>
MNO:  <xxxxxxx>  Sig:5
<Error message>
```

- **Server**: The method of communication to the SolarEdge monitoring portal. Should display **Cell**.
- **Status**: Displays OK if the inverter established a successful physical connection to the modem.
- **S_OK**: The last communication to the SolarEdge monitoring portal was successful (appears if the inverter is connected to the portal). If S_OK is not displayed, refer to *Status Screens - Operational Mode* on page 49.
- **MNO**: The mobile network operator name
- **Sig**: The signal strength, received from the modem. A value between 0-5, (0 = no signal, 5 = excellent signal).
- **Error message** per communication connection status failure.

Communication Ports Status

- **##**: The total number of slaves detected on the specific port
- **Dev**: The type of device that was configured to a specific port (based on the port's functionality), as follows:
  - **SE**: SolarEdge device (default)
  - **DM**: Revenue meter
  - **LGR**: Non-SolarEdge logger
  - **MLT**: multiple devices
- **PROT**: The protocol type to which the port is set:
  - For a SolarEdge device:
    - **S**: SolarEdge slave
    - **M**: SolarEdge master
    - **P2P**: ZigBee point-to-point
    - **MPM**: ZigBee multipoint master (for the SolarEdge ZigBee home gateway)
    - **MPS**: ZigBee multipoint slave (for a ZigBee router module)
  - For electricity meters, refer to the *application note - Connecting an Electricity Meter to SolarEdge Devices* at http://www.solaredge.com/files/pdfs/solaredge-meter-installation-guide.pdf.
  - **SS**: SunSpec - for a non-SolarEdge logger (monitoring and control)

Smart Energy Management Status

This screen is displayed only when Smart Energy Management is enabled. The screen shows energy details of the site:

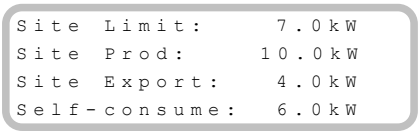

- **Site Limit**: The limit that was defined for the site
- **Site Prod**: The power produced by the site
- **Site Feed**: The power that is fed into the grid
- **Self-consume**: The PV power consumed by the site

Power Control Status

This screen is displayed only when Power Control is enabled (available from communication board (CPU) firmware version 2.7xx/3.7xx and later).

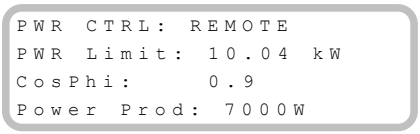

- **PWR CTRL**: The power control status:
  - **REMOTE** - Communication with the RRCR or smart energy manager is confirmed/validated.
  - **LOCAL** - The power is controlled locally (e.g. by a fixed limit), or this inverter limits the PV power production to its relative portion of the feed-in power limit, as a result of disconnected communication with the smart energy manager. If this status appears, check the communication to the smart energy manager or the communication to the meter.
- **PWR Limit**: The inverter maximum output power set by one of the power limiting options:
  - RRCR
  - Smart energy manager (Feed-in limitation)
  - P(f)
  - Q(U)
- **Cos Phi**: The ratio between active to reactive power
- **Power Prod**: The power produced by the inverter

For more information, refer to the following application notes:

- *Power Control Application Note*, available on the SolarEdge website at http://www.solaredge.com/files/pdfs/application_note_power_control_configuration.pdf
- *Export Limitation Application Note*, available on the SolarEdge website at http://www.solaredge.com/files/pdfs/products/feed-in_limitation_application_note.pdf

Battery Status

This screen is displayed only when the battery is configured, and shows the battery identification information, its charging status and power, and the operating mode.

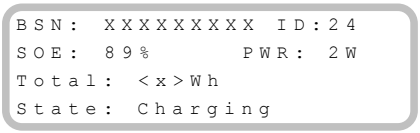

- **BSN**: Battery serial number
- **ID**: Battery identification - should be 24 as set up above
- **SOE**: State of Energy - the battery capacity percentage (calculated as Available Energy\Max. Energy)
- **PWR**: The charging or discharging power (in Watts) according to the battery state (see below)
- **Total**: The total discharged energy in Watt/hour
- **State**: The battery status: Charging/ Discharging, Idle, Init (pre-heating) or Fault <error code>.

Time Of Use Status

This screen is displayed only if TOU is configured, and shows information about the TOU settings for the site.

```
Name: xxxx
Last Sync: <Date>
Source: <Remote>
Set Until: <date>
```

- **Name**: The TOU profile file name
- **Last Sync**: Date when the time-of-use profile was loaded from the monitoring portal
- **Source**: the source from which the TOU profile was uploaded:
  - Remote - Profile uploaded from the SolarEdge monitoring portal
  - Local - Profile uploaded from an SD card
- **Set Until**: The date until the current profiles applicable

Chapter 8: Setting Up Communication to the Monitoring Portal

Power optimizers send information to the inverter via the DC power lines (the PV output circuit). The information is sent from the inverter to the SolarEdge monitoring portal through the Internet. In order to send the data from the inverter, a communication connection must be set up, as described in this chapter.

CAUTION!

When connecting the communication cables, make sure that the ON/OFF switch at the bottom of the inverter is turned OFF, and the AC is turned OFF.
When configuring the communication parameters, make sure that the ON/OFF switch is OFF, and the AC is turned ON.

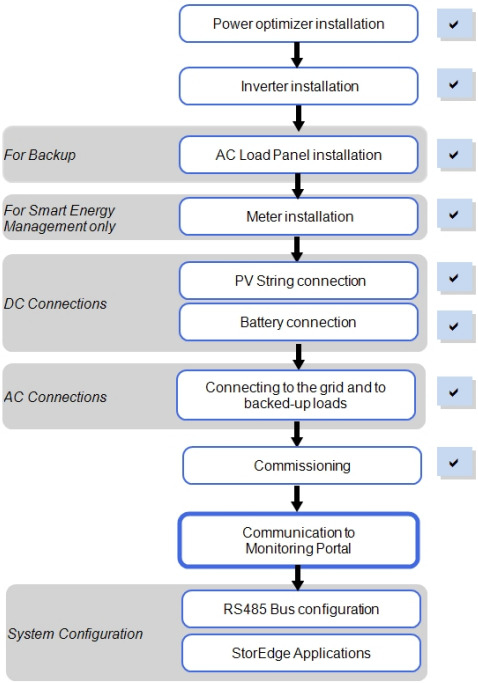

Communication Types

- **Ethernet**: used for a LAN connection
- **RS485**: used for the connection of multiple SolarEdge devices on the same bus in a master-slave configuration. RS485 can also be used as an interface to external devices, such as meters and third party data loggers.
- **ZigBee**: Optional wireless communication (purchased separately; refer to the supplied manual, also available at http://www.solaredge.com/groups/products/communication (under ZigBee)).
- **Wi-Fi**: Optional wireless connection (purchased separately; refer to the supplied manual).

Only communication products offered by SolarEdge are supported.

Communication Connectors

Two communication glands are used for connection of the various communication options. Each gland has three openings. The table below describes the functionality of each opening. Unused openings should remain sealed.

Gland#	Opening	Functionality	Cable Size (diameter)
1 (PG16)	One small	External antenna cable	2-4 mm
	Two large	Ethernet connection (CAT5/6), ZigBee, or Wi-Fi	4.5-7 mm
2 (PG13.5)	All three	RS485, power reduction	2.5-5 mm

Figure 25: Communication Glands

The communication board has a standard RJ45 terminal block for Ethernet connection, and a 9-pin terminal block for RS485 connection, as shown below:

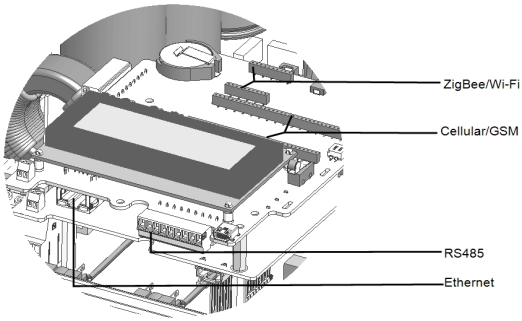

Figure 26: Internal connectors

Creating an Ethernet (LAN) Connection

This communication option enables using an Ethernet connection to connect the inverter to the monitoring portal through a LAN.

Ethernet cable specifications:

- Cable type – CAT5/CAT6
- Maximum distance between the inverter and the router – 100 m/ 330 ft.

NOTE

If using a cable longer than 10 m/33 ft in areas where there is a risk of induced voltage surges by lightning, it is recommend to use external surge protection devices. For details refer to: http://www.solaredge.com/files/pdfs/lightning_surge_protection.pdf. If grounded metal conduit are used for routing the communication wires, there is no need for a lightning protection device.

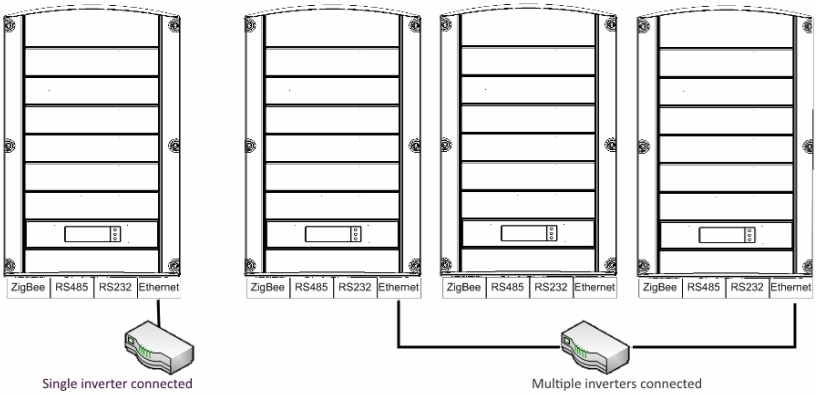

Figure 27: Example of Ethernet connection

To connect the Ethernet cable:

1. Remove the inverter cover .
2. Open the communication gland #1.

CAUTION!

The gland includes a rubber waterproof fitting, which should be used to ensure proper sealing.

3. Remove the plastic seal from the large opening that has a cut in the rubber fitting .
4. Remove the rubber fitting from the gland and insert the CAT5/6 cable through the gland and through the gland opening in the inverter .
5. Push the cable into the cut opening of the rubber fitting.

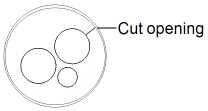

Figure 28: Rubber fitting

CAT5/6 standard cables have eight wires (four twisted pairs), as shown in the diagram below. Wire colors may differ from one cable to another. You can use either wiring standard, as long as both sides of the cable have the same pin-out and color-coding.

RJ45 Pin #	Wire Color[1]		10Base-T Signal 100Base-TX Signal
	T568B	T568A	
1	White/Orange	White/Green	Transmit+
2	Orange	Green	Transmit-
3	White/Green	White/Orange	Receive+
4	Blue	Blue	Reserved
5	White/Blue	White/Blue	Reserved
6	Green	Orange	Received-
7	White/Brown	White/Brown	Reserved
8	Brown	Brown	Reserved

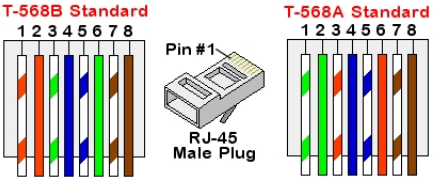

Figure 29: Standard cable wiring

6. Use a pre-crimped cable to connect via gland #1 to the RJ45 plug on the inverter's communication board or, if using a spool of cable, connect as follows:
   a. Insert the cable through gland #1.
   b. Remove the cable's external insulation using a crimping tool or cable cutter and expose eight wires.
   c. Insert the eight wires into an RJ45 connector, as described in *Figure 29*
   d. Use a crimping tool to crimp the connector.
   e. Connect the Ethernet connector to the RJ45 port on the communication board.

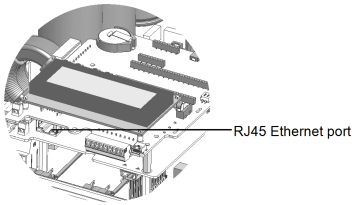

Figure 30: The RJ45 Ethernet connection

[1] The inverter connection does not support RX/TX polarity change. Supporting crossover Ethernet cables depends on the switch capabilities.

7. For the switch/router side, use a pre-crimped cable or use a crimper to prepare an RJ45 communication connector: Insert the eight wires into the RJ45 connector in the same order as above (*Figure 29*).
8. Connect the cable RJ45 connector to the RJ45 port of the Ethernet switch or router.
   You can connect more than one inverter to the same switch/router or to different switches/routers, as needed. Each inverter sends its monitored data independently to the SolarEdge monitoring portal.
9. The inverter is configured by default to LAN. If reconfiguration is required:
   a. Make sure the ON/OFF switch is OFF.
   b. Turn ON the AC to the inverter by turning ON the circuit breaker on the main distribution panel.
   c. Use the internal user buttons to configure the connection, as described in *Communication* on page 45.

NOTE

If your network has a firewall, you may need to configure it to enable the connection to the following address:

- Destination Address: prod.solaredge.com
- TCP Port: 22222 (for incoming and outgoing data)

10. Verify the connection, as described in *Verifying the Connection* on page 63.

Creating an RS485 Bus Connection

The RS485 option enables creating a bus of connected inverters, consisting of up to 31 slave inverters and 1 master inverter. Using this option, inverters are connected to each other in a bus (chain), via their RS485 connectors. The first and last inverters in the chain must be terminated.

RS485 wiring specifications:

- Cable type: Min. 3-wire shielded twisted pair (a 4-wire cable may be used)
- Wire cross-section area: 0.2- 1 mm²/ 24-18 AWG (a CAT5 cable may be used)
- Maximum nodes: 32
- Maximum distance between first and last devices: 1 km /3300 ft.

NOTE

If using a cable longer than 10 m/33 ft in areas where there is a risk of induced voltage surges by lightning, it is recommend to use external surge protection devices. For details refer to: http://www.solaredge.com/files/pdfs/lightning_surge_protection.pdf. If grounded metal conduit are used for routing the communication wires, there is no need for a lightning protection device.

NOTE

If an electricity meter is connected to your inverter, it uses the RS485 port and therefore an RS485 Expansion Kit is required (available form SolarEdge Refer to http://www.solaredge.com/files/pdfs/RS485_expansion_kit_installation_guide.pdf).

The following sections describe how to physically connect the RS485 bus and how to configure the bus.

To connect the RS485 communication bus:

1. Remove the inverter cover as described in *Removing the Inverter Cover* on page 32.
2. Remove the seal from one of the openings in communication gland and insert the wire through the opening.

3. Pull out the 9-pin RS485 terminal block connector, as shown below:

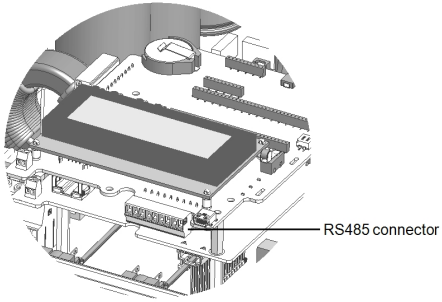

Figure 31: The RS485 terminal block

4. Loosen the screws of pins A(+), B(-), and G on the left of the RS485 terminal block (RS485-1).

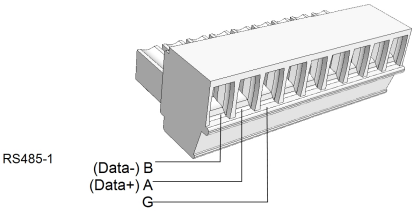

Figure 32: RS485 terminal block

5. Insert the wire ends into the **G**, **A** and **B** pins shown above. Use Four- or six-wire twisted pair cable for this connection. You can use any color wire for each of the **A**, **B** and **G** connections, as long as the same color wire is used for all A pins, the same color for all B pins and the same color for all G pins.

6. For creating an RS485 bus - connect all B, A and G pins in all inverters. The following figure shows this connection schema:

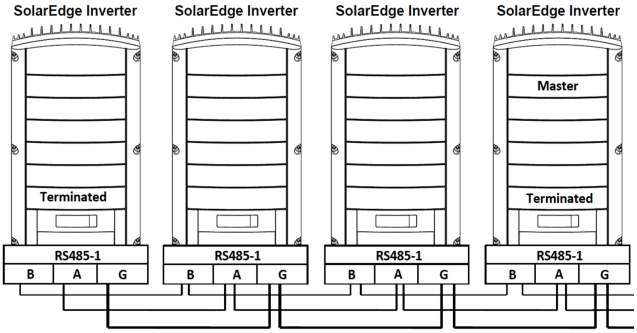

Figure 33: Connecting the inverters in a chain

NOTE

Do not cross-connect B, A and G wires. Do not insert wires into RS485- 2 pins.

7. Tighten the terminal block screws.
8. Check that the wires are fully inserted and cannot be pulled out easily.
9. Push the RS485 terminal block firmly all the way into the connector on the right side of the communication board.
10. Terminate the first and last SolarEdge device (inverter/Control and communication gateway, etc.) in the chain by switching a termination DIP-switch inside the inverter to ON (move the switch up). The switch is located on the communication board and is marked SW7.

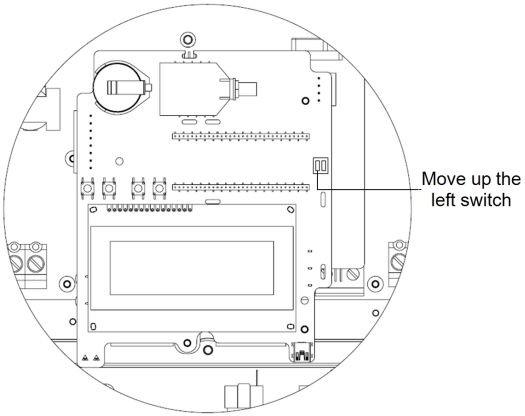

Figure 34: RS485 termination switch

NOTE

Only the first and last SolarEdge devices in the chain should be terminated. The other inverters in the chain should have the termination switch OFF (down position).

Verifying the Connection

After connecting and configuring a communication option, perform the following steps to check that the connection to the monitoring server has been successfully established.

1. Close the inverter cover: Attach the inverter cover and secure it by tightening the screws with a torque of 9.0 N*m/ 6.6 lb.*ft. For proper sealing, first tighten the corner screws and then the two central screws.
2. Turn ON the AC to the inverter by turning ON the circuit breaker on the main distribution panel.
3. Wait for the inverter to connect to the SolarEdge monitoring portal. This may take up to two minutes.

A status screen similar to the following appears on the LCD panel:

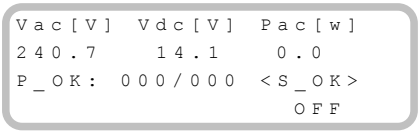

S_OK: Indicates that the connection to the SolarEdge monitoring portal is successful. If S_OK is not displayed, refer to *"Troubleshooting" on page 72.*

Chapter 9: System Configuration

This chapter describes how to configure your StorEdge system by setting up the communication between the system components and setting up the required application.

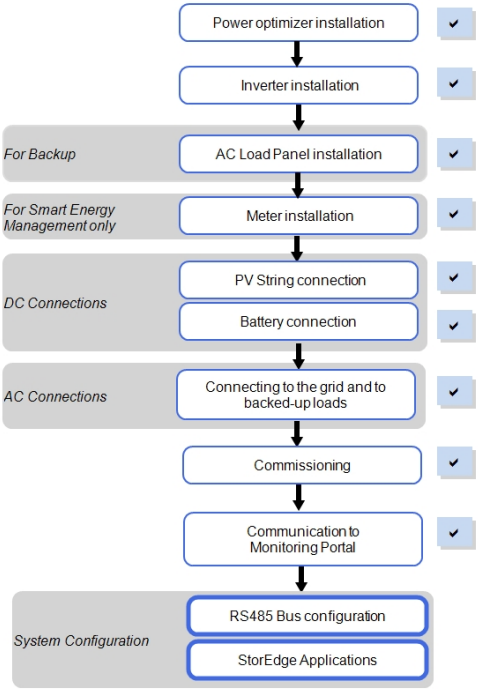

Configuring the RS485 Bus for Battery and Meter Connection

This section describes how to set up the RS485 communication between the inverter, meter and battery.

To configure the RS485 bus:

1. Turn OFF or verify that the StorEdge Connection Unit switch is OFF.
2. Turn the inverter ON/OFF switch to OFF.
3. Select **Communication ➔ RS485-1 Conf ➔ Device Type ➔ Multi Devices**. A list of devices is displayed.

```
Device Type <MLT>
Meter 1 <---->
Meter 2 <---->
Meter 3 <---->
Battery 1 <---->
Battery 2 <---->
```

4. Select **Meter 2**. The meter configuration screen is displayed (SolarEdge meters are pre-configured to Device ID 2):

```
Device Type <MTR>
Protocol <WN>
Device ID <2>
CT Rating <0>
Meter Func. <None>
```

5. Configure the meter:
   a. Select **Device Type ➔ Revenue Meter**
   b. Select **Protocol ➔ WattNode**
   c. Verify that **Device ID** is set to **2**.
   d. Set the CT value that appears on the CT label: **CT Rating ➔ <xxxxA>**.
      If CT resets to 0, check the communication as described in step b of verify the connection:below.
   e. For a meter installed at the grid connection point select **Meter Func.➔ Export+Import.**

```
Export+Import
Export
Consumption
Production
Import
None
```

   The selected option is displayed in the RS485 Conf screen as <E+I>.

6. Select **Battery 1**. The battery configuration screen is displayed:

```
Device Type <BAT>
Protocol <T74>
Device ID <24>
Battery Info < >
```

7. Select **Device Type ➔ Battery Pack**.
8. To verify battery connection, select **Battery Info** and check that the battery information is displayed. If not, check the wiring to the battery:

```
SN: <serial #>
Model: <XXXXXX>
Rated PWR[kWH]: N/A
FW Ver. <XXXXX>
```

   Make sure to have the battery serial number and firmware version at hand whenever contacting support.

To verify the connection:

1. Press the inverter external LCD light button to display the status screens one after the other:
   a. Check the RS485 communication status:

```
          Dev  Prot  ##
RS485-1<MLT><02><02>
```

   - The **MLT** under **Dev** denotes that the configuration is for multiple devices.
   - The number under ## should display the number of *configured* devices.
   - The number under **Prot** (protocol) should display the number of *configured and communicating* devices.

   The above screen shows an example of 2 devices on the same bus (for example: meter and battery).

   If the number of devices under Prot does not match the number under ##, refer to *Troubleshooting* on page 72

   b. Check the meter(s): In the meter(s) status screen check that the status is **OK**. The following is an example of the status of an Export (or Export+Import) meter:

```
Export Meter
Status:      <OK/Error#>
Power[W]:       xxxxx.x
Energy[Wh]:     XXXXX.X
```

   If **Comm. Error** appears, refer to *Troubleshooting* on page 72.

   c. Check the battery information: identification, charging status and power, and the operating mode.

```
BSN: XXXXXXXXX ID:24
SOE: 89%       PWR: 2W
Total: <x>Wh
State: Charging
```

   If **Comm. Error** appears, refer to *Troubleshooting* on page 72.

Configuring StorEdge Application

This section describes the StorEdge applications and how to configure the system.

Backup Power Applications

The produced power is stored in the battery to be used during power outages. The StorEdge inverter senses the grid voltage, and when it is down it automatically switches to Backup mode, disconnecting from the grid and supplying power to the backed-up loads. This application requires connection to the SolarEdge Auto-transformer and a backed-up loads panel.

This application can be used in one of two ways:

- **Backup-only** – energy stored in the battery is discharged for backup power only
- **Backup with Smart Energy Management**– use some of the battery energy for backup power and the rest for maximize self-consumption(MSC) or charge/discharge profile programming (for time of use arbitrage) applications. Configuration for backup+MSC is described herein; for backup + profile programming, refer to http://www.solaredge.com/files/pdfs/StorEdge_TOU_profile_programming.pdf

For more information, refer to the refer to the StorEdge Applications Connection and Configuration Guide available at http://www.solaredge.com/files/pdfs/storedge_backup_applications_connection_and_configuration_guide.pdf.

The Backup application can be used whether or not PV modules are installed at the site. The backup function is disabled by default and can be enabled for on- grid only application, if backup is not needed.

System Configuration

To enable Backup functionality:

1. Enter Setup mode to display the main menu:

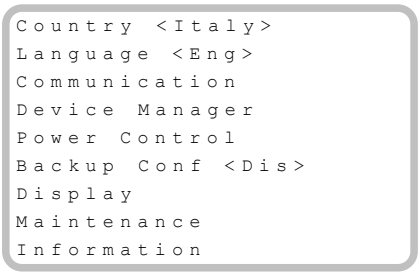

2. From the main menu select **Backup Conf**.

   If disabled (no backup), the function is similar to on-grid (no voltage source, loads are connected to the main distribution panel) .

3. Select **Backup** ➔ **Enable**.

To access the Energy Control menu:

1.

2. Enter Setup mode, scroll down to the **Power Control** menu and select it. A menu similar to the following is displayed:

```
Grid Control <En>
Energy Manager
RRCR Conf.
Reactive Pwr Conf.
Active Pwr Conf.
Phase Balance <Dis>
Wakeup Conf.
P(f)
Advanced
Load Defaults
```

3. Select **Energy Manager**. The following screen is displayed:

```
Limit Control<Dis>
Energy Ctrl <Dis>
Storage Control
```

Limit Control: For power limitation (including export limitation) configuration. This option can be used in parallel to energy control. For more information refer to http://www.solaredge.com/files/pdfs/products/feed-in_limitation_application_note.pdf.

- **E**: Export limit
- **P**: Production limit
- **Dis**: Disabled - no limit

Energy Control: The method by which to manage the energy.

Storage Control: Enables reserving a minimum battery charge level.

4. Select **Energy Ctrl.**. The following is displayed, showing the SolarEdge applications:

```
Max Self-consume
Time of Use
Backup Only
Disable
```

Max Self-consume (MSC): Maximize Self-consumption

Time of Use (TOU): Charge/Discharge Profile Programming

Backup Only: Supply power to loads during power outage

Disable: No energy control, that is, the battery is not used

To set up Backup-only:

1. Access the **Energy Control** menu as described above.
2. Select **Backup only**. The Energy Manager screen changes to display the following:

```
Limit Control<Dis>
Energy Ctrl <BU>
Storage Control
```

To set up Backup Power + Smart Energy Management:

1. To set a minimum battery level used for backup, so that the battery will always have energy stored in case backup power is needed, do the following:
   a. From the **Energy Manager** menu select **Storage Control**. The following is displayed:

   ```
   Backup RSVD<%PV>
   ```

   b. Select **Backup RSVD** and set the required level as percentage of the battery capacity:
      - For backup power + Smart Energy Management - according to user requirement
      - For backup-only - according to battery manufacturer recommendation, if provided
2. Access the **Energy Control** menu as described above.
3. For maximizing self consumption, select **Max Self-Consume**. The Energy Manager screen changes to display the following:

   ```
   Limit Control<Dis>
   Energy Ctrl <MSC>
   Set Operation
   Storage Control
   ```

4. Optionally, set the battery OFF periods as follows:
   a. Select **Set Operation**. A list is displayed, allowing 12 monthly profile setup:

   ```
   Jan <ON>
   Feb <ON>
   Mar <ON>
   Apr <ON>
   ```

   b. Select a month. A list of options is displayed.

   ```
   Start Time <00:00>
   End Time <00:00>
   Always ON
   Always OFF
   ```

   c. Select one of the options:
      - Select **Always OFF** to avoid battery usage entirely (for example during winter)
      - Set **Start Time** and **End Time** to set battery usage in specific hours and avoid usage during specific hours throughout the month (for example at night). This sets the periods during which the battery will be in the OFF state.
      - Select **Always ON** to use battery at all times for charging/ discharging.

Verifying StorEdge Components Functionality

Upon installation and configuration completion, the system should be operating according to the selected StorEdge application.

This section describes how to verify that all system components are functioning as expected. If not, refer to *Troubleshooting* on page 72.

To check the meter and inverter:

1. Verify that AC is ON.
2. Check the meter (installed in export or consumption position, CT arrows point to the grid):

a. Turn the inverter ON/OFF switch to OFF.

b. Connect loads on one of the measured phases.

c. Press the external LCD light button to display the Import or Consumption meter status screen (depending on the connection point), and check that the import or consumption energy (Energy [Wh]) is greater than 0 (may take a few minutes, depending on the loads size):

```
Import Meter
Status:      <OK/Error#>
Power[W]:       xxxxx.x
Energy[Wh]:     XXXXX.X
```

d. Press the LCD light button to display the Export meter status screen, and check that the Export power is equal to zero. If it is not zero, check the CT direction on all connected phases.

3. Turn the inverter ON/OFF switch to ON.
4. Turn the StorEdge Connection Unit switch to ON.
5. While the modules are exposed to sunlight (PV system is connected to the grid and the inverter is producing power), press the inverter LCD light button to display the power status screen, and check that the grid AC output (Vac) increases to 220-240V, and the total AC output power produced (Pac):

```
Vac[V]  Vdc[V]  Pac[W]
240.7     371.9 2349.3
P_OK: XXX/YYY <S_OK>
                    ON
```

To check Backup:

1. Disconnect the AC power by shutting off the AC at the main distribution panel. The inverter should disconnect from the grid, and continue supplying power to the backed-up loads.

   Switching to Backup mode takes a few seconds. The LCD screen will show tha Backup mode is ON:

```
Vac[V]  Vdc[V]  Pac[W]
240.7   371.9   2349.3
P_OK: XXX/YYY <S_OK>
Backup Mode         ON
```

2. Press the external LCD light button to display the battery status screen, and check that:
   - The battery State is: Discharging / Charging
   - The SOE percentage is decreasing/increasing
   - The PWR value is greater than 0

```
BSN: XXXXXXXXX ID:24
SOE:89%        PWR: 3W
Total: <x>Wh
State: Discharging
```

3. Turn the AC back ON from the main distribution panel. The inverter should reconnect loads back to the grid.

To check Maximize Self-consumption mode:

1. Verify the inverter ON/OFF switch is ON.
2. Turn on as many loads so that consumption is greater than the inverter's maximum AC power.

3. Press the inverter LCD light button to display the Meter status screen and check that import power is greater than zero:

```
Import Meter
Status:      <OK/Error#>
Power[W]:       xxxxx.x
Energy[Wh]:     XXXXX.X
```

4. Press the inverter LCD light button to display the Smart Energy Management and the Battery status screens, and check that:
   - **State** = Discharging (assuming consumption > PV production ; inverter maximum AC power > PV production.
   - **PWR** > 0

```
BSN: XXXXXXXXX ID:24
SOE:89%        PWR: 2W
Total: <X>Wh
State: Discharging
```

5. While the PV modules are exposed to sunlight , verify that the battery is charging properly:
   a. Minimize consumption by turning off all the load circuit breakers, except for the inverter.
   b. In the inverter LCD check that the Meter status screen is displaying import power close to zero.
   c. Press the external LCD light button to display the Battery status screen, and check that:
      - **State** = Charging
      - **SOE** percentage is increasing
      - **PWR** > 0

```
BSN: XXXXXXXXX ID:24
SOE:89%        PWR: 2W
Total: <x>Wh
State: Charging
```

Appendix A: Troubleshooting

This appendix describes how to troubleshoot StorEdge related errors.

Communication Troubleshooting

When a battery and a meter are connected (2 devices connected to the same bus), the following should appear in the Communication status screen:

```
          Dev  Prot  ##
RS485-1<MLT><02><02>
ZigBee  <---><--><-->
```

Device type, number and protocol are displayed incorrectly

If one or more of the following occurs, the meter(s) or the battery are not communicating with the inverter:

- If **Dev** is not **MLT** (Multi) , the system is not pre-configured and requires full configuration. Configure the system as described in *Configuring the RS485 Bus for Battery and Meter Connection* on page 64.
- If **## < 02**, the meter and/or the battery are not configured correctly. Check the configuration.
- If **Prot < 02**, the meter and/or the battery is not communicating correctly. Check the configuration and wiring connection (refer to *Figure 15*).

If Prot = ##– the battery and meter are configured and communicating properly.

Troubleshooting Ethernet Communication

When using Ethernet communication, use the **Server Communication Status** window to identify the location of the error:

```
Server:LAN   <S_OK>
Status:        <OK>
     xxxxxxxx
<ERROR MESSAGE>
```

xxxxxxxx is a string of 1s and 0s showing an eight-bit communication connection status. 1 indicates OK and 0 indicates an error.

Bit Location	Error Message	Cause and Troubleshooting
1st	LAN Disconnected	Physical connection fault. Check the cable pin-out assignment and cable connection. Refer to .
2nd	DHCP Failed, or Invalid DHCP Config	IP settings issue. Check the router and inverterconfiguration. Consult your network IT.
3rd	Gateway Ping Failed	Ping to router failed. Check the physical connection to the switch/router. Check that the link LED at the router /switch is lit (indicating phy-link). If OK - contact your network IT, otherwise replace the cable or change it from cross to straight connection.

Bit Location	Error Message	Cause and Troubleshooting
4th	G Server Ping Failed	Ping to google.com failed. Connect a laptop and check for internet connection. If internet access is unavailable, contact your IT admin or your internet provider. For Wi-Fi networks, ensure that username and password are as defined in the internet provider AP/router.
5th	Server x Ping Failed	Ping or connection to SolarEdge server failed.. Check the SolarEdge server address, under **LAN Conf** submenu: Address: prod.solaredge.com Port: 22222 Check with your network administrator whether a firewall or another device is blocking transmission.
6th		
7th		
8th	Tcp Connect. Failed	

Meter Troubleshooting

When a meter is connected, there will be a status screen for each meter function. The following is an example of the export meter function status:

```
Production Meter
Status:        <OK/Error>
Power[W]:          xxxxx.x
Energy[Wh]:        xxxxx.x
```

<OK> is not displayed

If **<OK>** is not displayed in the Status line of the status screens, the meter is not communicating with the inverter communication board. Check the following:

- There are no loose connections at the inverter communication board and at the meter.
- The wiring between the 4-pin terminal block on the meter and the RS485 terminal block on the StorEdge Connection Unit is correct (refer to *Figure 15*).

An error message is displayed

If **Error 185 Meter Comm. Error** is displayed in the meter status screen, verify proper connection of:

- The RS485 cables and connectors
- The AC connection of the meter

Power [Wh] Import value is not advancing

If the inverter is not producing power, and there is power consumption by the loads, check the following:

- The meter status LEDs are lit. If the LEDs are all OFF, the meter is not connected to a power source.
  - Check the meter AC connection (10-pin terminal block)
  - Check that the meter breaker is ON
- There are no loose connections at the 10-pin AC wiring of the meter.
- The CT black and white cables are correctly connected to the 6-pin connector on the meter:

- White CT wire is connected to L1 white
- Black CT wire is connected to L1 black

- CT direction is towards the grid and the green power LEDs are ON. If the LEDs are not green indicating import power - the CTs are reversed.

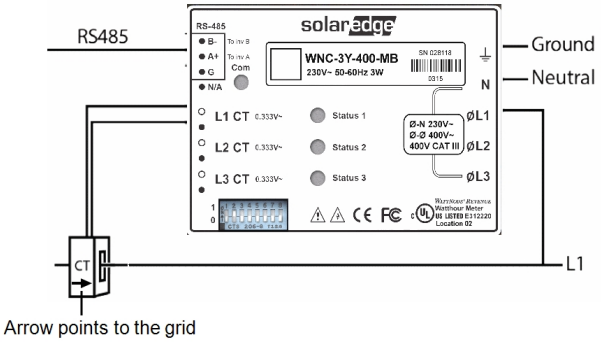

Figure 35: Meter with CT

Battery Troubleshooting

The State line in the battery status screen should display one of the following: Charging, Discharging, Idle, Off, Init.:

```
BSN: XXXXXXXXX ID:24
SOE: 89%       PWR: 2W
Total: <x>Wh
State: Charging
```

- If **Error 186 Battery Comm. Error** appears, the battery communication is disconnected. Check the following:
  - The RS485 control connection to the battery
  - The DIP switches settings on the battery:
    - S2, S6: Left
    - S1, S5: Down
    - S3, S4: Up
  - The ID DIP switches setting on the battery - All should be set to the right (0) position
- If the state **Idle** is displayed instead of Charging/Discharging, check the following:
  - The system configuration
  - The DC connection
  - The LEDs in the StorEdge Connection Unit - refer to *StorEdge Connection Unit LEDs* on page 80
- If **Battery Internal Fault** is displayed, refer to the battery documentation supplied with it.The following is an example fault screen.

```
Battery Internal
Fault <#>(ID : 24)
<xxxx>
<xxxx>
```

Fault # - according to battery

ID - The Modbus ID of the battery

<xxx> - text

Additional StorEdge Troubleshooting

Some of the troubleshooting procedure may require removing the covers of system components (inverter, battery, StorEdge Connection Unit, or meter). Be sure to disconnect all power sources to avoid electrocution.

For opening the cover refer to *Removing the Inverter Cover* on page 32

WARNING!

ELECTRICAL SHOCK HAZARD. Do not touch uninsulated wires when the inverter cover is removed.

Problem	Description or possible cause	Troubleshooting
During normal operation (grid supplies power), no power to the backup loads while the inverter is producing power	The main circuit breakers or loads circuit breakers in the backed up loads panel have been triggered	Check that the backed-up loads breakers on the CB panel are in the UP position
	Internal circuit breaker has been triggered	Check that the AC circuit breaker in the StorEdge Connection Unit is in the UP position (see *Figure 6*)
	The inverter is malfunctioning	Restart the inverter
		If the problem persists, move the AC bypass switch in the StorEdge Connection Unit to position 2 (see *Figure 6*) to supply power to the loads until the inverter problem is solved (contact SolarEdge support if required). Then move to position 1.
No power to the backup loads while grid is OFF (power outage)	The backed-up loads are not backed up	○ Check that the inverter is producing power ○ Check that the Backup function is enabled (**Backup conf ➔ Backup ➔ Enable**. ○ Check that there are no errors on the inverter LCD ○ Check the circuit breakers on the backed-up loads AC panel ○ Check that the AC breaker in the StorEdge Connection Unit are in the UP position (see *Figure 6*) ○ Check that the AC bypass switch in the StorEdge Connection Unit is set to position 1 (see *Figure 6*) .

Error Codes

The error messages include an error number and a description, and have the following format:

```
Error Code XXX
(3xD2)
<Line 1>
<Line 2>
```

XXX: The error number.

(#-X#): A code indicating the source of error and the error information sent to the monitoring server. This information is used by SolarEdge Support for advanced troubleshooting.

Line 1-2: Error description

WARNING!

All Warnings and Cautions in this manual should be adhered to while troubleshooting an error.

General Inverter Error Codes

Error #	LCD Message	Cause and Troubleshooting
4, 5, 8, 12, 18-23, 39, 42, 45	SW Error	Contact SolarEdge Support.
10, 37, 38	Ground Current - RCD	Ground faults may occur due to insufficient insulation to the ground. **WARNING!** ELECTRICAL SHOCK HAZARD. Do not touch uninsulated wires when the inverter cover is removed. Only a qualified technician should handle this problem, and only after taking proper precautions. 1. Turn the inverter ON/OFF switch to OFF. 2. Wait five minutes for the input capacitors to discharge. 3. Disconnect the AC breaker. 4. Disconnect the DC inputs. 5. Connect each DC string separately, turn the AC and the inverter ON/OFF switch to ON, until the error appears for the faulty string. ○ Do not connect strings with a grounding fault to the inverter. A certified installer must fix the faulty string before connecting it to the inverter ○ For further documentation, contact SolarEdge Support.
14	AC Voltage Too High (Line 1/2/3)	If the fault persists: ○ Check the AC connection to inverter. ○ Verify that the inverter is set to the correct country. ○ Check with the grid operator if a large surge source or irregular load exists near the site. ○ Verify that the output wire size matches the distance between the inverter and the location of the grid connection. ○ Use a larger gauge wire for the AC output. ○ Refer to the *AC Wiring Application Note* http://www.solaredge.com/files/pdfs/application-note-recommended-wiring.pdf
15	DC Voltage Too High	The SolarEdge system normally eliminates DC overvoltage errors. If the fault persists: ○ Turn OFF the inverter ON/OFF switch. If after five minutes, the LCD panel does not show a low safety voltage (1V per optimizer), check which string is malfunctioning and recheck its connections to the inverter. ○ Proceed according to *Power Optimizer Troubleshooting* on page 81 ○ Re-commission all inverters in the site, as described in *Commissioning the Installation* on page 32
16	Hardware Error	Contact SolarEdge Support.
17	Temperature Too High	○ Verify proper inverter clearances. ○ Make sure the heat-sink fins are clean and unobstructed.

Error #	LCD Message	Cause and Troubleshooting
24	Faulty Temp. Sensor	Broken or unconnected temperature sensor. Contact SolarEdge Support.
25	Isolation Fault	◦ Check the PV installation for isolation problems and ground leakage. ◦ Only a certified PV installer must fix the faulty string before connecting it to the inverter. ◦ Refer to www.solaredge.com/files/pdfs/application_note_isolation_fault_troubleshooting.pdf
26	Faulty AC Relay	◦ Disconnect inverter from AC grid. ◦ Contact SolarEdge Support.
27, 153	Hardware Error	Contact SolarEdge support.
28	RCD Sensor Error	Contact SolarEdge support.
29-30	Phase Balance Error	◦ Check the grid connection. ◦ Check the GND connection. ◦ Check the L1, L2 and Neutral connections. ◦ Verify symmetric load between L1 and L2. ◦ Consult the local grid authority.
31, 33	AC Voltage Too High (Line 1/2/3)	◦ Verify that the inverter is set to the correct country. ◦ Turn OFF the inverters in the site and verify AC grid voltage. ◦ If the inverter is located far from the connection point to the grid, use a larger gauge AC wire. ◦ Consult the grid operator. ◦ If permitted by local authorities, change the grid protection values. Refer to http://www.solaredge.com/files/pdfs/viewing_grid_protection_values.pdf
32, 41	AC Voltage Too Low	◦ Verify that the inverter is set to the correct country. ◦ Consult the grid operator. ◦ If permitted by local authorities, change the grid protection values. Refer to http://www.solaredge.com/files/pdfs/viewing_grid_protection_values.pdf
34	AC Freq Too High (Line 1/2/3)	
35	AC Freq Too Low (Line 1/2/3)	
36	DC Injection (Line 1/2/3)	Contact SolarEdge support.
40	Islanding	AC grid voltage malfunction. When AC voltage returns the inverter should restart after the reconnection time. If the problem persists, consult with the grid operator.
43	Internal HW Error	Contact SolarEdge support.
44	No Country Selected	Select the country, as described in *Country and Grid* on page 45.
46	Phase Unbalance	Select **Power Control ➔ Phase Balance ➔ Disable**.

StorEdge-related Errors Codes

This section describes the error messages that are specific to the StorEdge solution. For the general SolarEdge troubleshooting refer to the codes in the previous section.

Error code	LCD message	Cause and Troubleshooting
179, 180	Backup Consumption Too High	Inverter production stopped due to backed-up loads' consumption exceeding product rating. Shutdown non-essential loads to reduce power consumption.
181	Connection Unit HW Error	Check all the communication cable between the StorEdge Connection Unit and the digital board in the inverter.
183	Connection Unit Communication Error	There is a faulty wire connection or an internal error. ○ Check the communication cable between the StorEdge Connection Unit and the digital board in the inverter. ○ Check that the StorEdge Connection Unit LEDs are ON.
184	Connection Unit Temp. Too High	Inverter production stopped due to StorEdge Connection Unit overheating or due to internal fan malfunction. ○ Clean the StorEdge Connection Unit fan ○ If the fan is malfunctioning, replace the fan
185	Meter Comm. Error	Refer to *Meter Troubleshooting* on page 73.

System Warnings

Warnings are displayed in the initial status screen with the format: <Warning X>. For example:

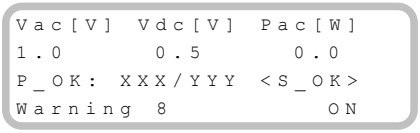

The warning is a status screen. To view the warning description, press the LCD button.

The following is a list of system warnings:

Warning #	LCD text	Comments and troubleshooting
1-4, 6-7	Fan X Failure	Clean or replace the fan
5	Turn Switch Off to Configure	Appears when trying to access the Setup menus during production
8	Connection Unit Low 9V Battery	Replace the 9V battery in the StorEdge Connection Unit. Refer to *9V Battery Replacement* on page 82.

StorEdge Connection Unit LEDs

There are three LEDs on the lower board of the StorEdge Connection Unit, near the DIP switches:

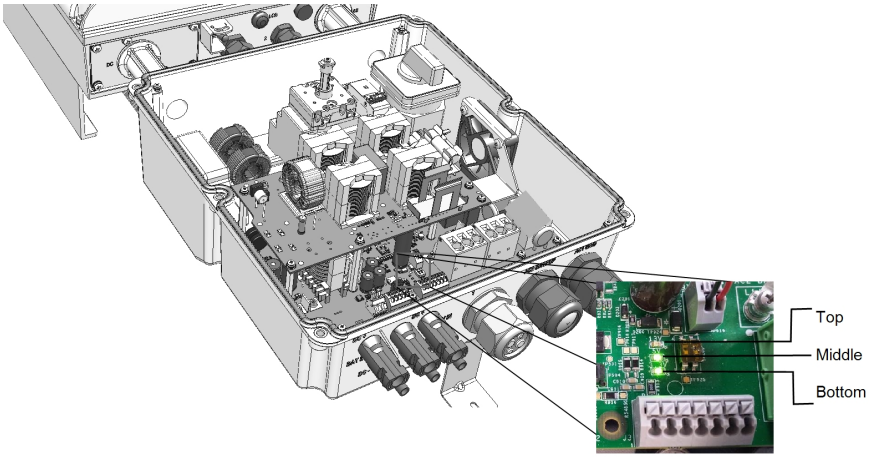

Figure 36: StorEdge Connection Unit LEDs

- In normal operation, the middle and bottom LEDs indicate auxiliary voltages (13V from DC/DC, 5V and 3.3V) and should always be lit.
- The top LED should be lit when the inverter DC voltage is at least 200 Vdc (check when both inverter ON/OFF switch and StorEdge Connection Unit switch are ON). You can check the status screen for the Vdc value.
- If all LEDs are OFF:
  - Check that AC voltage exists in the inverter
  - Check that the communication cable between the StorEdge Connection Unit and the digital board is properly connected.
- If the top LED is ON, and middle and bottom LEDs are off - an internal failure has occurred. Contact SolarEdge support.

Power Optimizer Troubleshooting

If the inverter status screen indicates that not all power optimizers are paired or not all are reporting (P_ OK xxx/yyy, and x<y), those optimizers can be identified through the LCD. Refer to http://www.solaredge.com/files/pdfs/products/inverters/non-responding-power-optimizers.pdf

Problem	Possible cause and troubleshooting
Pairing failed	Power optimizers are shaded. If you connected the inverter to the SolarEdge monitoring portal, retry pairing remotely (during sunlight).Make sure to leave the inverter ON/OFF switch ON and that S_OK appears on the LCD..
String voltage is 0V	Power optimizer(s) output is disconnected. Connect all power optimizer outputs
String voltage not 0V but lower than number of optimizers	Power optimizer(s) not connected in the string. Connect all power optimizers
	Module(s) not connected properly to power optimizer inputs (not applicable to smart modules). Connect the modules to the optimizer inputs
	String reverse polarity. Check string polarity using a voltmeter and correct if needed.
String voltage is higher than the number of optimizers **WARNING!** If the measured voltage is too high, the installation may not have a safe low voltage. PROCEED WITH CARE! A deviation of ±1% per string is reasonable.	Extra power optimizer(s) connected in the string (not applicable to smart modules). Check if an extra power optimizer is connected in the string. If not – proceed to next solution.
	A module is connected directly to the string, without a power optimizer (not applicable to smart modules). Verify that only power optimizers are connected in the string and that no module outputs are connected without a power optimizer. If the problem persists, proceed to the next step.
	Power optimizer(s) malfunction. ○ Disconnect the wires connecting the power optimizers in the string. ○ Measure the output voltage of each power optimizer to locate the power optimizer that does not output 1V safety voltage. If a malfunctioning power optimizer is located, check its connections, polarity, module, and voltage. ○ Do not continue before finding the problem and replacing the malfunctioning power optimizer. If a malfunction cannot be bypassed or resolved, skip the malfunctioning power optimizer, thus connecting a shorter string.

Appendix B: Replacing and Adding System Components

NOTE

If you are permanently disassembling the installation or part of it, make sure to use the disposal methods dictated by local regulations.

CAUTION!

Do not remove the six screws on the DC metal panel as it may harm the inverter sealing and void the warranty.

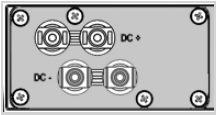

Replacing an Inverter

1. Turn OFF the inverter ON/OFF switch, and wait until the LCD indicates that the DC voltage is safe (<50V), or wait five minutes before continuing to the next step.

WARNING!

If you cannot see the inverter panel, or if a malfunction is indicated on the LCD panel, wait five minutes for the input capacitors of the inverter to discharge.

2. Turn OFF .
3. Open the StorEdge Connection Unit cover.
4. Turn the Bypass switch inside the StorEdge Connection Unit to position 2, in order to maintain power to the backed-up loads.
5. Open the inverter cover as described in *Removing the Inverter Cover* on page 32.
6. Disconnect the DC plugs and AC wires from the inverter. Open the DC and AC wires ferrite beads and set them aside.
7. Disconnect the cable connecting the inverter digital board to the StorEdge Connection Unit.
8. Remove the screws securing the inverter to the mounting bracket and remove the inverter from the mounting bracket.

NOTE

If you remove the old inverter and do not immediately install a new one, use insulation tape to isolate each of the AC and DC wires

9. Place the new inverter on the mounting bracket; insert the screws securing the inverter to the mounting bracket.
10. Connect the DC and AC wires to the inverter.
11. Follow the instructions of *Installing the Inverter* on page 15 and *Commissioning the Installation* on page 32.

9V Battery Replacement

If Warning 8: **Connection Unit Low 9V Battery** is displayed in the main status screen, replace the 9V battery in the StorEdge Connection Unit.

1. Turn OFF the inverter ON/OFF switch, and wait until the LCD indicates that the DC voltage is safe (<50V), or wait five minutes before continuing to the next step.

WARNING!

If you cannot see the inverter panel, or if a malfunction is indicated on the LCD panel, wait five minutes for the input capacitors of the inverter to discharge.

2. Turn OFF the StorEdge Connection Unit and the AC switch of the distribution panel.
3. Open and remove the StorEdge Connection Unit cover.
4. Open and remove the transparent internal cover.
5. Remove the battery from the upper board of the StorEdge Connection Unit and replace with a new standard 9V battery.
6. Close the StorEdge Connection Unit covers.

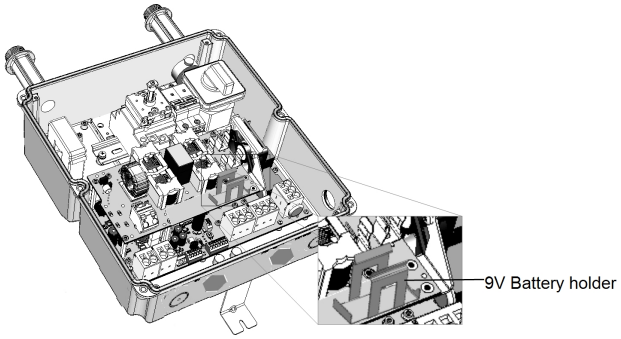

Figure 37: The battery holder

Fuse Replacement

Replacement kits are available from SolarEdge or you can use other fuses with identical ratings.

1. Turn OFF the inverter ON/OFF switch, and wait until the LCD indicates that the DC voltage is safe (<50V), or wait five minutes before continuing to the next step.

WARNING!

If you cannot see the inverter panel, or if a malfunction is indicated on the LCD panel, wait five minutes for the input capacitors of the inverter to discharge.

2. Turn OFF the StorEdge Connection Unit and the AC switch of the distribution panel.
3. Open and remove the StorEdge Connection Unit cover.
4. Open and remove the internal transparent cover.
5. Remove the faulty fuse from the upper board of the StorEdge Connection Unit and replace with a new fuse.
6. Close the StorEdge Connection Unit covers.

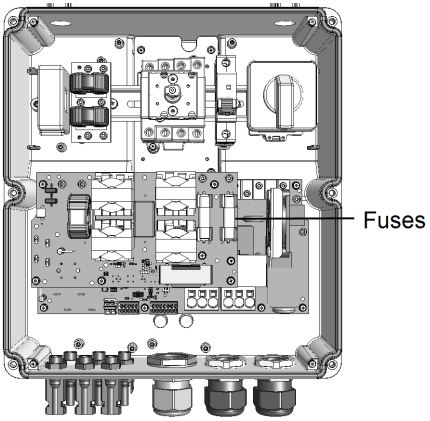

Figure 38: StorEdge Connection Unit fuses

StorEdge Connection Unit Replacement

Removing the Existing StorEdge Connection Unit

1. Turn OFF the inverter ON/OFF switch, and wait until the LCD indicates that the DC voltage is safe (<50V), or wait five minutes before continuing to the next step.

WARNING!

If you cannot see the inverter panel, or if a malfunction is indicated on the LCD panel, wait five minutes for the input capacitors of the inverter to discharge.

2. Turn OFF the StorEdge Connection Unit and the AC switch of the distribution panel.
3. Disconnect the DC and battery cables from the StorEdge Connection Unit.
4. Open the inverter cover.

5. Disconnect the DC and AC wires from the inverter. Open the DC and AC wires ferrite beads and set them aside.
6. Disconnect the cable connecting the inverter digital board to the StorEdge Connection Unit.
7. Unscrew the two conduit nuts in the inverter securing the StorEdge Connection Unit to the inverter.
8. Open the StorEdge Connection Unit cover and disconnect:
   - Backed-up loads panel wires, if connected
   - External meter, if connected
9. Release the bracket securing the StorEdge Connection Unit to the wall.
10. Carefully remove the StorEdge Connection Unit with its mounting bracket from the wall.

Installing a New StorEdge Connection Unit

1. Open the StorEdge Connection Unit cover.
2. Position the new StorEdge Connection Unit below the inverter and from the inside of the inverter grab the AC and DC wires extending from the unit conduits, as shown below:

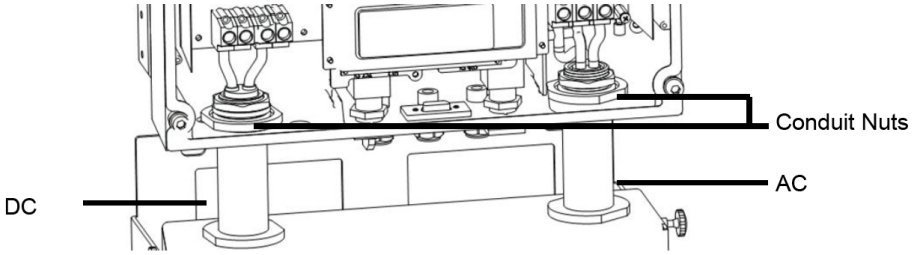

Figure 39: Inserting the AC and DC conduits

3. Attach the StorEdge Connection Unit with its bracket to the wall and slightly close the screws. Do not over tighten.
4. Reconnect the cable from the inverter digital board to the StorEdge Connection Unit.
5. Reconnect all the external wires and ferrite beads.
6. Securely screw the two conduit nuts onto the conduit ends in the inverter. Verify proper conduit sealing.
7. Close the StorEdge Connection Unit cover. Attach the cover and secure it by tightening the six screws with a torque of 1.2 N*m / 0.9 ft.*lb.

Appendix C: StorEdge Technical Specifications

	SE5000-RWS	SE6000-RWS	Unit
OUTPUT - AC (LOADS/GRID)			
Rated AC Power Output	5000[1]	6000	VA
Max AC Power Output	5000[1]	6000	VA
Max Power Output - Continuous - Battery Only (Nighttime)	2000		VA
Max Power Output - Surge - Battery Only (Nighttime)	3300 for 10 sec		VA
AC Output Voltage (Nominal)	220 / 230		Vac
AC Output Voltage Range	184 - 264.5		Vac
AC Frequency	50 / 60 ± 5		Hz
Maximum Continuous Output Current	27		A
Residual Current Detector / Residual Current Step Detector	300 / 30		mA
Utility Monitoring, Islanding Protection, Country Configurable Thresholds	Yes		
Charge Battery from AC (if allowed)	Yes		
THD	<3		%
Power factor with rated power	>0.99 (configurable; 0.9 leading to 0.9 lagging)		
Typical Nighttime Power Consumption	<5		W
OUTPUT - AC (BACKUP POWER)[2]			
Rated AC Power Output	5000		VA
Max AC Power Output - Surge	7300		VA
Max Power Output - Continuous - Battery Only (Nighttime)	2000		VA
Max Power Output - Surge - Battery Only (Nighttime)	3300 for 10 sec		VA
AC Output Voltage (Nominal)	220 / 230		Vac
AC Output Voltage Range	184 - 264.5		Vac
AC Frequency	50 / 60 ± 5		Hz
Maximum Continuous Output Current	22		A
AC Breaker	Yes		
THD	<3		%
Power factor with rated power	0.2 leading to 0.2 lagging		

[1] Limited to 4600VA where required.
[2] Not designed for standalone applications and requires AC for commissioning.

	SE5000-RWS	SE6000-RWS	Unit
Automatic switchover time	<2		sec
Typical Nighttime Power Consumption	<5		W
INPUT - DC (PV and BATTERY)			
Transformer-less, Ungrounded	Yes		
Max Input Voltage	500		Vdc
Nom DC Input Voltage	400		Vdc
Reverse-Polarity Protection	Yes		
Ground-Fault Isolation Detection	600kΩ Sensitivity		
Maximum Inverter Efficiency	97.6		%
European Weighted Efficiency	97.4		%
INPUT - DC (PV)			
Maximum DC Power (STC)	6750	8100	W
Max Input Current	19.5	23	Adc
2-pole Disconnection	Yes		
INPUT - DC (BATTERY)			
Continuous Peak Power	3300		
Number of Batteries per Inverter[1]	1		
Max Input Current	8.5		Adc
2-pole Disconnection	Yes		
DC Fuses on Plus and Minus	12A (field replaceable)		
ADDITIONAL FEATURES			
Supported Communication Interfaces	RS485 for battery, RS485, Ethernet, ZigBee (optional), Wi-Fi (optional)		
Battery Power Supply	Yes, 12V / 53W		
Integrated AC, DC and Communication Connection Unit	Yes		
AC Disconnect	Yes		
Manual Inverter Bypass Switch	Yes		
DC Voltage Rapid Shutdown (PV and Battery)	Yes, according to VDE 2100-712 (pending)		
STANDARD COMPLIANCE (PENDING)			
Safety	IEC-62103 (EN50178), IEC-62109		
Grid Connection Standards[2]	VDE 0126-1-1, NRS 097-2-1, AS4777		
Emissions	IEC61000-6-2, IEC61000-6-3, IEC61000-3-11, IEC61000-3-12		

[1] For more batteries per inverter contact SolarEdge.
[2] For all standards refer to Certifications category in Downloads page: http://www.solaredge.com/groups/support/downloads.

	SE5000-RWS	SE6000-RWS	Unit
INSTALLATION SPECIFICATIONS			
AC Output (Loads/Grid) gland cable diameter / wire cross section	9-16 / 2-14		mm/mm^2
AC Output (Backup) gland cable diameter / wire cross section	9-16 / 2-14		mm/mm^2
DC Input (PV)	2 MC4 pairs		
DC Input (Battery)	1 MC4 pair		
Dimensions with Connection Unit (HxWxD)	962 x 315 x 184		mm
Weight with Connection Unit	26.5		kg
Cooling	Natural convection and internal fan (user replaceable)		
Noise	<50		dBA
Min - Max Operating Temperature[1]	-20 to +60		°C
Protection Rating	IP65 - Outdoor and Indoor		

[1] Power derating from 50°C

Appendix D: Inverter Dimensions

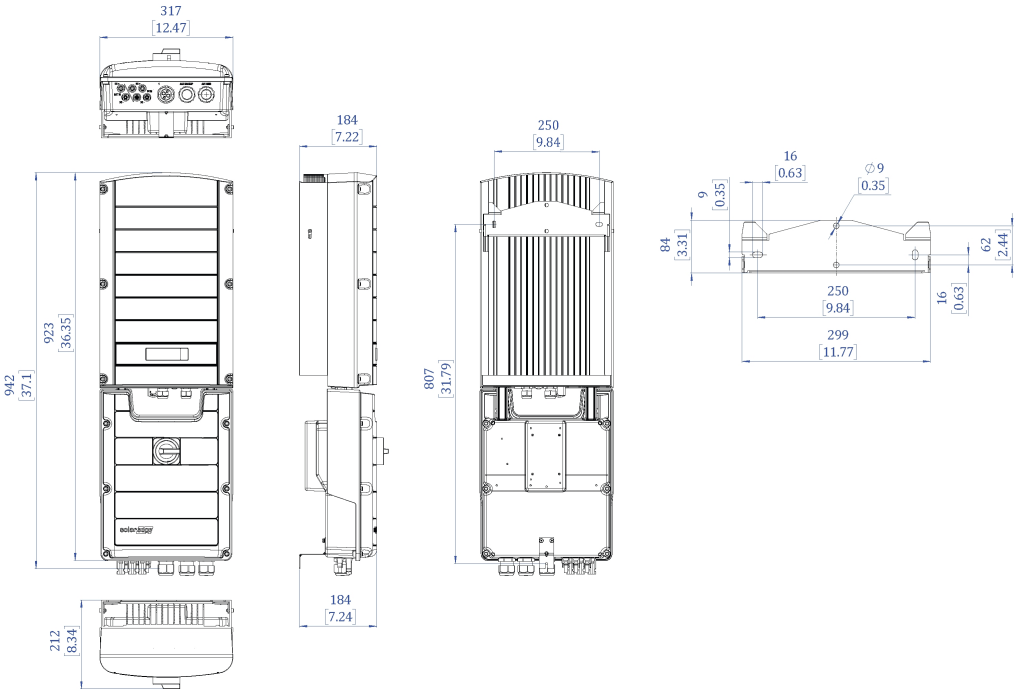

Figure 40: Inverter dimensions

If you have technical queries concerning our products,
please contact our support through SolarEdge service portal:
http://www.solaredge.com/groups/support/services

Australia (+61)	1800-465-567
Belgium (+32)	0800-78889
China(+86)	186-0166-3934
France (+33)	0800-917410
Germany (+49)	089-45459730
Italy (+39)	800-784-824
Japan (+81)	03-6261-1274
United Kingdom (+44)	0800-028-1183
US & Canada (+1)	510-498-3200
Greece (+30)	00800-125574
Israel (+972)	073-240-3122
Netherlands (+31)	0800-022-1089
New Zealand (+64)	0800 144 875
Worldwide (+972)	073-2403118
Fax (+972)	073-240-3117
Email to:	support@solaredge.com

solaredge

www.solaredge.com

MAN-01-00283 -1.0